English

EN

GAS 210 ECO PRO

High efficiency Low Nox gas boiler

Types:

210-80

210-120

210-160

210-200

Technical information

114494-190310

remeha

Table of contents

Preface 6

1. EC declaration 7

2. Introduction 8
2.1 Pictograms used 8
2.2 Important instructions 8

3. Safety 9

4. Installation 10
4.1 Scope of delivery and installation 10
4.2 Dimensions 11
4.3 Installation and service clearances 12

5. Water-side connections 13
5.1.1 Condensed water discharge 13
5.1.2 Water treatment 13
5.1.3 Pressure relief valve 14
5.1.4 Circulation pump 14
5.1.5 Water flow 14

6. Gas-side connections 15
6.1 Gas connection 15
6.2 Gas pressure 15
6.3 Gas/air ratio control 15

7. Connecting the flue gas discharge and air supply 16
7.1 General 16
7.2 Conventional open flue installation 16
7.2.1 Possible lengths for the flue gas discharge pipe 17
7.3 Room sealed installation 18
7.3.1 Possible lengths for the air supply and flue gas discharge 18
7.3.2 Discharge in different pressure areas 20
7.3.3 Connection of flue gas discharge and choice of material 21
7.3.4 Air supply connection and choice of material 21

8. Control and electrical connections 22
8.1 General 22
8.1.1 Boiler control 22
8.1.2 Modulating controls general 22
8.1.3 Modulating room control 22
8.1.4 Modulating weather-compensated control rematic® 22
8.1.5 Modulating cascade controller MC4 23
8.2 Electrical specifications 23
8.2.1 Mains voltage 23
8.2.2 Control box 23
8.2.3 Fuse ratings 24
8.3 Electrical connection options 24
8.3.1 Connection options of standard control unit (PCU-01) 24
8.3.2 On/off control (OT) 24
8.3.3 Modulating controls (OT) 24
8.3.4 External interlock (BL) 24
8.3.5 Input release (RL) 25
8.3.6 Circulation pump (Pump) 25
8.3.7 Connecting a PC 25
8.3.8 Connection options for the PCB - SCU - X01 25

remeha

8.4 Connection options for the optional 0 - 10 V control PCB (IF-01) 26
8.4.1 Connection status (Nc) 26
8.4.2 OTm connection 26
8.4.3 Analogue input (0 - 10 V) 27
8.4.4 Analogue output (0 - 10 V) 27
8.5 Connection options of the optional expanded control/protection PCB (SCU-S01) 28
8.5.1 Flue gas damper control (FgV) 28
8.5.2 Hydraulic valve control (HdV) 28
8.5.3 External gas valve control (EgV) 28
8.5.4 Operation signal and failure signal (Nc / No) 28
8.5.5 Water pressure sensor (Wps) 28
8.5.6 Outside temperature sensor (Tout) 29
8.5.7 Minimum gas pressure switch (Gps) 29
8.5.8 Gas leakage control (VPS; only for 210- 160 and 210- 200 boilers) 29
8.5.9 Wiring diagram 30

9 Commissioning 31
9.1 Control panel 31
9.1.1 Normal start-up procedure 31
9.1.2 Fault during start-up procedure 32
9.1.3 Reading current values 33
9.1.3.1 Status and sub status 34
9.1.4 Adjusting the boiler to the system 34
9.1.5 Changing parameters at user level (without access code) 35
9.1.6 Changing parameters at service level (with access code) 35
9.1.7 Resetting factory settings 38
9.1.8 Setting manual operation ✋ (˜symbol) 39
9.2 Commissioning 39
9.3 Taking the boiler out of operation 42
9.3.1 Boiler with frost protection, out of operation for a long time 42
9.3.2 Boiler without frost protection, out of operation for a long time 42

10. Inspection and maintenance 43
10.1 General 43
10.2 Combustion check of the boiler 43
10.2.1 Corrective maintenance 43
10.2.2 Cleaning the fan 44
10.2.3 Cleaning the heat exchanger (flue gas side) 46
10.2.4 Cleaning the burner 47
10.3 Cleaning the trap 48
10.4 Checking the ignition electrode 48
10.5 Checking for leaks 48
10.6 Checking water pressure 48
10.7 Putting boiler back into operation 48

11. Control stops and faults 49
1 1.1 General 49
11.2 Control stops and faults 49
11.3 Control stop codes 49
11.4 Fault codes 51
11.5 Control stop - and fault memory 54
1 1.5.1 Reading faults 55
11.5.2 Deleting control stops or faults 55

12. Service parts **56**
12.1 General 56
12.2 Exploded view 57

13. Regulations **58**
13.1 General 58
13.2 Standards 58
13.3 Remeha factory test 58
13.4 Supplementary guidelines 59

14. Technical specifications **60**
14.1 Technical data 60

15. Efficiency data and gas inspection labels **61**
15.1 Unit usable efficiency (HR efficiency) 61
15.2 Water-side efficiency 61
15.3 Zero-load losses 61
15.4 Description of specifications 61
15.5 Accessories 62
15.6 Services 62
15.7 Type of unit 63
15.8 Operating principle 64
15.9 Boiler Control 64
15.9.1 Temperature control 64
15.9.2 Low water level protection 64
15.9.3 Maximum protection 65
15.9.4 Frost protection 65

16. Application data **66**
16.1 General 66
16.2 Air and flue gas application options 66
16.3 Hydraulic application options 66
16.4 Cascade application 66
16.5 Control options 69
16.6 Gas application options 69

17. Checklists (records) **70**
17.1 Checklist for commissioning (Commissioning record) 70
17.2 Checklist for annual inspection (inspection record) 70
17.3 Checklist for maintenance (maintenance record) 71

Preface

PREFACE

This technical information , which contains a lot of practical information about the Remeha Gas 210 ECO **PRO**, a High efficiency central heating unit, is mainly intended for installers. It contains important instructions for safe and trouble-free operation of the boiler before commissioning and during operation.
Read these instructions carefully before putting the boiler into operation, familiarise yourself with its control functions, operation and strictly observe the instructions given. Failure to do so may invalidate warranty or prevent the boiler from operating. The boiler is available in the following types:

- Gas 210 ECO **PRO** 80 (3 sections; 87 kW)
- Gas 210 ECO **PRO** 120 (4 sections; 120 kW)
- Gas 210 ECO **PRO** 160 (5 sections; 166 kW)
- Gas 210 ECO **PRO** 200 (6 sections; 200 kW)

The installation, commissioning, inspection and servicing of the boiler must be carried out by a competent Corgi registered engineer who holds valid A.C.S. certification and in accordance with current gas safety (installation and use) regulations, the building regulations and all other relevant codes of practice.
All electrical work must be carried out by a competent engineer and to be installed in accordance with the current IEE regulations.

If you have any questions, require an engineer to call on site, or if you need more information about specific subjects relating to this boiler, or it's installation please do not hesitate to contact our technical help line 0118 978 3434.

When contacting Broag with a problem on the boiler , please have available the boiler type, Serial No (located on the bottom of the casing), and the symptoms or fault code (the fault code is a series of flashing digits in the display panel).

The data published in these technical instructions is based on the latest information (at date of publication) and may be subject to revisions.
We reserve the right to continuous development in both design and manufacture, therefore any changes to the materials or technology employed may not be retrospective nor may we be obliged to adjust earlier supplies accordingly.

1. EC declaration

EC - DECLARATION OF CONFORMITY

Manufacturer : Remeha B.V.
Address : Kanaal Zuid 110
City, Country : Postbus 32, NL-7300 AA Apeldoorn, Holland

- this is to declare that the following product(s) : Remeha Gas 210 ECO **PRO**

is/are in conformity with the following EEC-directives:

EEC- Directive:	**90/396/EEC**	tested and examined to the following norms:
EN		656 A1$_{(2006)}$, EN 15417$_{(2006)}$ 15240$_{(2006)}$
	92/42/EEC	
	73/23/EEC	DIN EN 50165$_{(2001)}$, EN 50165$_{(1997 + A1: 2001)}$ DIN EN 60335-1$_{(2003)}$, EN 60335-1$_{(2002)}$
	89/336/EEC	EN 55014-1$_{(2000+A1:2001)}$, 55014-2$_{(1997+A1:2001)}$
EN		61000-3-2$_{(2000+A2:2005)}$, 61000-3-3$_{(1995+A1:2001)}$
97/23/EEC		(article 3, sub 3)

CE
07

Apeldoorn, aug. 2007

W.F. Tijhuis
Approval manager

2. Introduction

2.1 Pictograms used

The following pictograms are used in this document to emphasise certain instructions. This is in order to increase your personal safety and to safeguard the technical reliability of the boiler . The pictograms used are:

Useful advice.

Important instruction for carrying out an action.

Possible risk of bodily injury or material damage to boiler , building or environment.

Possible risk of electrical shocks. Serious bodily injury may occur .

2.2 Important instructions

The boiler must be installed in a frost-free area.

Work on the boiler
Installation, commissioning, maintenance and repair work may only be carried out by suitably qualified specialist installers in accordance with the applicable national and local standards and guidelines.Always disconnect the mains supply and close the main gas cock when working on the boiler. Check the entire system for leaks after maintenance and servicing work.

Casing panels may only be removed for maintenance and servicing purposes. Refit all panels on completion of maintenance and servicing work.

Instruction and warning labels on the boiler must never be removed or covered and must be clearly legible throughout the entire service life of the boiler. Replace damaged or illegible instruction and warning labels immediately. Generally applicable safety instructions related to accident prevention must be consulted in addition to the information supplied in this technical documentation.

Boiler modifications
Modifications to the boiler require the written approval of Broag.

Keep this document near to the installation.

3. Safety

Adhere strictly to the specific safety instructions.

⚠

Can you smell gas? Proceed as follows:

- do not smoke and avoid fire and sparks
- do not operate electrical switches.
- close the gas cock.
- open doors and windows.
- trace possible leaks and seal them off.
- if the leak is upstream of the gas meter, notify National Gas Emergency Service tel: 0800 1110999.

⚠

Can you smell flue or combustion gases? Proceed as follows:

- isolate the mains power supply from the boiler.
- open doors and windows.
- trace possible leaks and seal them off.

4. Installation

4.1 Scope of delivery and installation

The boiler is supplied fully assembled and protected. The boiler is placed on a pallet (70 x 130 cm, 145 cm high), which can be transported with a pallet truck, hand truck, forklift truck or 4-wheel transport boards. The packaging passes through all standard doors (minimum width of 74.5 cm).

The boiler is installed as follows:
- Position the pallet with the boiler in the boiler room;
- Remove the fixing bands and all other packaging (some components are packaged in the polystyrene cap);
- Lift the boiler from the pallet;
- Slide the boiler into the required position, using the recessed handles in the boiler base;
- Cover the boiler and do not operate it whilst dust creating construction processes or insulation to the pipe work etc. are carried out in the plant room.

4.2 Dimensions

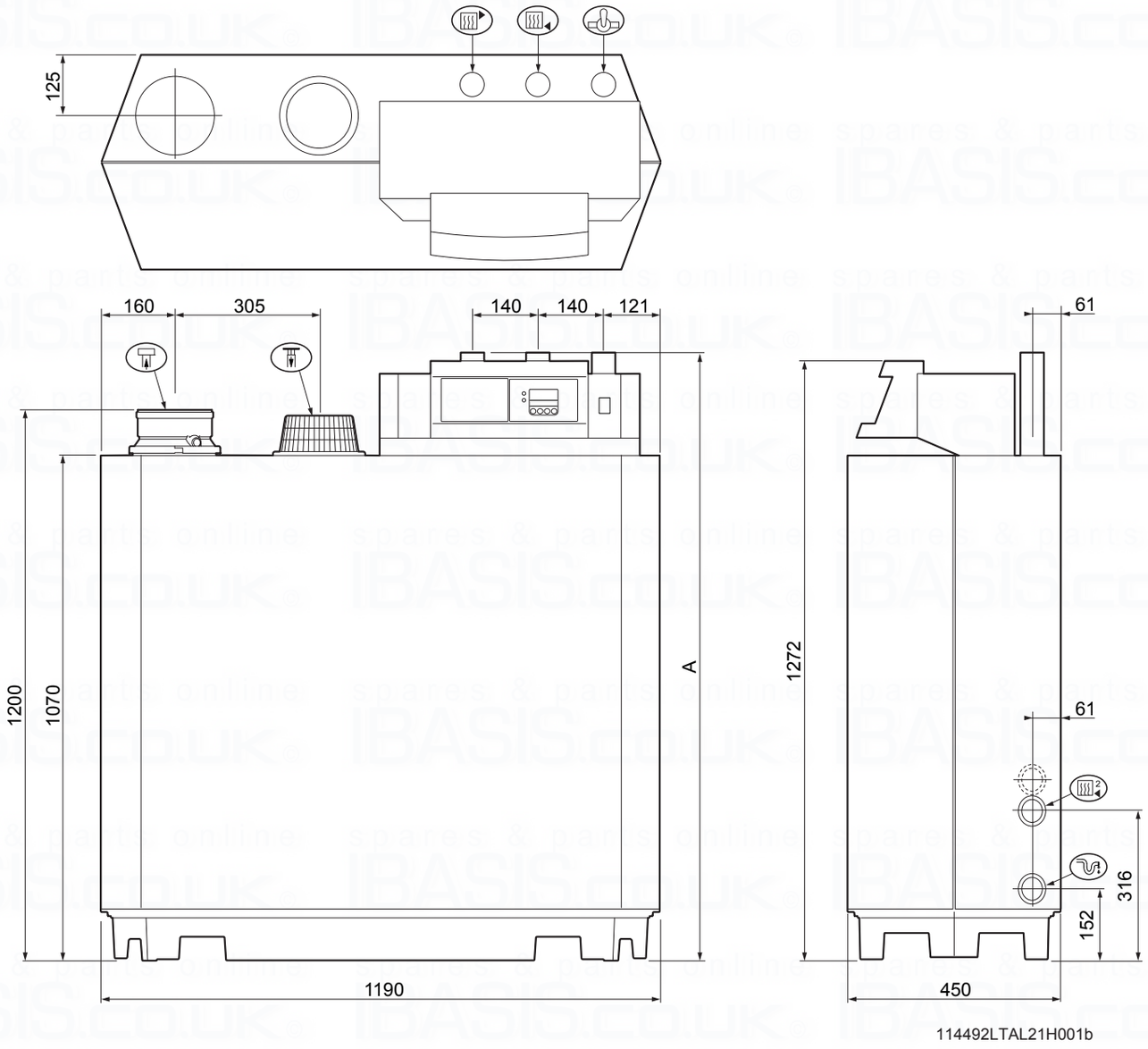

fig. 01 Elevation drawings

Connection	Gas 210 ECO PRO 80/120/160	Gas 210 ECO PRO 200
Flow	1¼” male thread	1½” male thread (fit supplied adapter 1¼” > 1½”)
Return	1¼” male thread	1½” male thread (fit supplied adapter 1¼” > 1½”)
Gas connection	1¼” male thread	1¼” male thread
Condensate drain	Ø 32 mm external	Ø 32 mm external
Combustion air supply	Ø 150 mm	Ø 150 mm
Flue gas outlet	Ø 150 mm	Ø 150 mm
Dimension “**A**”	1309 mm	1324 mm
Second return (option)	1¼” male thread	1¼” male thread

4.3 Installation and service clearances

Clearance of at least 60 cm is required at the front of the boiler . However, we recommend a clearance of 1 m. W e recommend a clearance of at least 40 cm above the boiler control panel, at least 5 cm on the left side and at least 25 cm on the right side in connection with condensed water discharge. Install a gas cock in the immediate vicinity of/above the boiler.

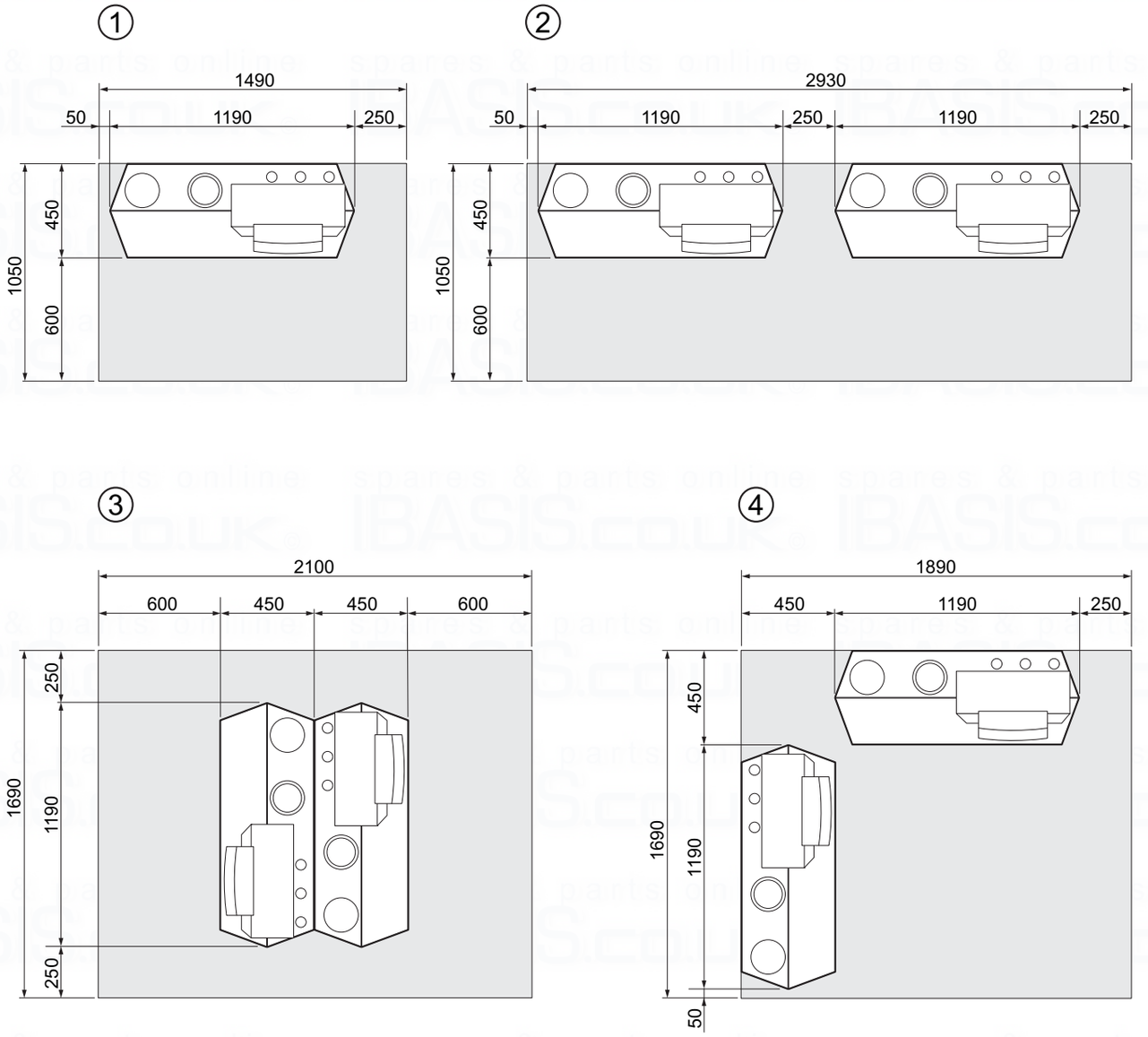

fig. 02 Boiler room installation options

5. Water-side connections

5.1.1 Condensed water discharge

Discharge the condensed water directly into a foul water drain. In view of the acidity level of condensate (pH between 3 and 5), only use plastic material for the discharge pipe. After assembly, fill the trap with clean water. Make an open connection with the drain. The discharge pipe must slope down by at least 30 mm/m. Condensed water must not be discharged into gutters or rain water down pipes.

5.1.2 Water treatment

- Use untreated tap water only to fill the CH system.
- The pH value of the system water must be between 7 and 9.
- Where inhibitors are being used, please refer to Broag recommendations in this section and follow the manufactures instructions given.

If used correctly water treatment can improve the boilers ef ficiency and increase the anticipated life expectancy of the boiler .

☞
For further information a special document “Remeha water quality regulations” is available from Broag. The regulations mentioned in this document must be followed.

As most systems contain a variety of metals, it is considered good practice to provide some form of water treatment in order to prevent or reduce the following:
- Metallic corrosion
- Formation of scale and sludge
- Microbiological contamination
- Chemical changes in the untreated system water

⚠
All scale deposits, however small, will reduce the ef ficiency of the boiler and should be prevented.

Suitable chemicals and their use should be discussed with a specialist water treatment company prior to carrying out any work (environmental aspects, health aspects). The specification of the system and manufacturers recommendations must be taken into account, along with the age and condition of the system. New systems should be flushed thoroughly to BS 7593(1992) to remove all traces of flux, debris, grease and metal swarf generated during installation. Care to be taken with old systems to ensure any black metallic iron oxide sludge and other corrosive residues are removed, again by power flushing, ensuring that the system is drained completely from all low points.

☞
Please ensure that the new boiler plant is not in circuit when the flushing takes place, especially if cleansing chemicals are used to assist the process.

It is important to check the inhibitor concentration after installation, system modifications, filling the system and every service in accordance with these instructions.

For the correct dosage and the suitability of inhibitors for use with our boilers and for further information on water treatment or system cleaning we advise direct contact with either of the following companies:

'Copal®' manufactured by:
Fernox, Cookson Electronics
Forsyth Road
Sheerwater
Woking
Surrey GU21 5RZ
Tel No: 01483 793200
Fax No: 01483 793201
Email: sales@fernox.com
Website: www.fernox.com
or:

Sentinal 'X100®' manufactured by:
Sentinel Performance Solutions
The Heath Business & Technical Park
Runcorn
Cheshire,
WA7 4QX
Tel No: 0800 389 4670
Fax No: 0800 389 4677
Email: info.uk@sentinel-solutions.net
Website: www.sentinel-solutions.net

5.1.3 Pressure relief valve

Install an pressure relief valve in the system, in accordance with NEN 3028, between any valves and the boiler and in the flow pipe within 0.5 m of the boiler.

5.1.4 Circulation pump

The boiler is equipped with a pump switch to connect an external circulation pump. This pump is run once every 24 hours to prevent sticking (24 hour pump operation). Only on/off pumps can be controlled. For connections, *see Section 8.3.6.*

The hydraulic resistance for the various output options of the boiler is as follows:

Boiler type	Hydraulic resistance at a ΔT of 20°C		Hydraulic resistance at a ΔT of 10°C	
	mbar	kPa	mbar	kPa
210-80	165	16,5	545	54,5
210-120	135	13,5	446	44,6
210-160	170	17,0	562	56,2
210-200	180	18,0	595	59,5

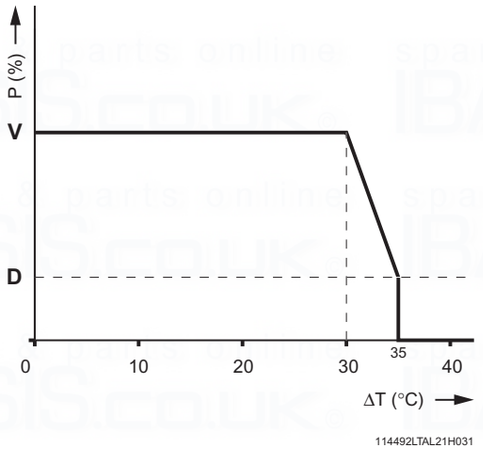

fig. 03 *Output control characteristic*
114492LTAL21H031

V = full load *P = heat output*
D = part load *ΔT = temperature difference*

5.1.5 Water flow

The maximum temperature difference between flow and return, and the maximum rate of rise of the flow temperature and boiler block temperature are limited by the boiler's modulating controls. As a result, the boiler is virtually unaffected by low water flow. However for a continuous supply of heat, the boiler requires a minimum flow of 30 % of the nominal flow at the relevant design temperatures.

6. Gas-side connections

6.1 Gas connection

The boiler is suitable for use with natural gas and propane* category II_{2H3P}. For other types of natural gas, consult our Technical department. All gas appliances must, by law, be installed by competent persons (e.g. Corgi). Failure to install appliances correctly could lead to prosecution. It is in your own interest and that of safety to ensure that the law is complied with.

The gas connection is at the top of the boiler. We recommend installing a gas filter in the gas supply pipe to avoid pollution of the gas multiblock. The gas filter's resistance must not be so high that the minimum inlet gas pressure can no longer be achieved.

* Refer to Broag for using propane.

6.2 Gas pressure

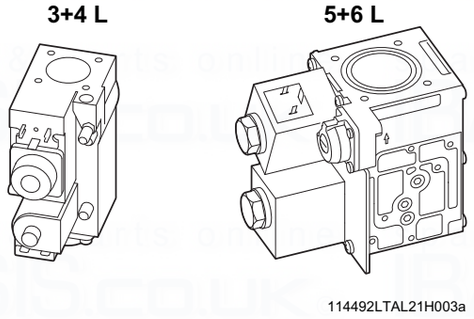

fig. 04 Gas multiblocks

The boiler has been factory set and tested by Remeha to natural gas (G20) - with an inlet pressure of 17 mbar.
The boiler is suitable for 17 - 30 mbar inlet gas pressure.
For propane (LPG), an inlet pressure of 37 - 50 mbar is required.

6.3 Gas/air ratio control

The boiler has a zero governor gas valve. This gas valve maintains the ratio between the gas and air quantities in the burner at a constant level under variable loads. This ensures clean and reliable combustion and high efficiency across the entire load range.

7. Connecting the flue gas discharge and air supply

7.1 General

The Remeha Gas 210 **PRO** is suitable for conventional room ventilated or room sealed operation. Specify at the time of ordering if the boiler is to be supplied for room sealed operation. In that case, the boiler will be supplied with a purpose-designed room sealed terminal, air supply connection and some accessories. The air supply connection should rest on the heat exchanger underneath the boiler casing after removing the standard perforated air inlet cover. Horizontal components in the flue gas discharge system should slope towards the boiler. Horizontal components in the air supply system should slope towards the supply opening.
Room sealed terminals should comply with the national requirements for both horizontal and vertical outlet constructions.
Care should be taken when siting flue exit positions as a vapour plume will be visible when the boiler is operational (flue gas temperature will be less than 80°C resulting in the water vapour condensing out on contact with the air).

Classification due to discharging flue gases
The boiler is approved according to CE with classification:

Type B23: Conventional room ventilated appliance without draft diverter. Air supply from boiler room; flue gas discharge on roof.
Type $B23_P$: Conventional room ventilated boiler without draft diverter. Air supply from boiler room: flue gas discharge on roof, metal flue gas discharge with CE symbol, meets pressure class P1.
Type C13: Room sealed boiler, connected to combined wall outlet.
Type C33: Room sealed appliance, connected to combined roof outlet.
Type C43: Room sealed appliance in cascade configuration, connected via two ducts to a common duct system serving more than one appliance.
Type C53: Room sealed appliance, connected to separate ducts for the air supply and flue gas discharge, terminated in zones of different pressure.
Type C63: Room sealed appliance, supplied without the terminal or the air supply and flue gas discharge ducts.
Type C83: Room sealed appliance, connected to separate air supply and flue gas discharge duct, with flue gas discharge duct always in underpressure.

7.2 Conventional open flue installation

The open flue version extracts the necessary combustion air from the plant room or compartment. A table showing the maximum discharge lengths can be found in *Section 7.2.1.*

- The air supply opening must stay open.
- The installation area or boiler room must be equipped with the necessary combustion air supply openings. These openings must not be obstructed or shut off.
- The combustion air supply must be free of dust and chemically-aggressive agents (such as trichloroethylene or halogenated hydrocarbons), as used in aerosol cans, certain types of adhesive, certain solvents and cleaning agents, and paint, etc.

7.2.1 Possible lengths for the flue gas discharge pipe

Conventional room ventilated, type B23 according to CE.

Maximum permitted flue gas discharge lengths (L) in m		
Boiler type	**D (mm)**	**Free discharge**
210-80	100	18
	110	35
	130	+
210-120	110	20
	130	48
	150	+
210-160	130	22
	150	45
	180	+
210-200	130	14
	150	31
	180	+

table 01 *Flue gas discharge table for the open version*
+ = Lengths up to 50m possible. For longer lengths, consult our Technical department

When flue gas discharge pipes with diameters other than 150 mm are used, an adapter is required: Ø150/100mm, Ø150/1 10mm, Ø150/130mm or Ø150/180mm.

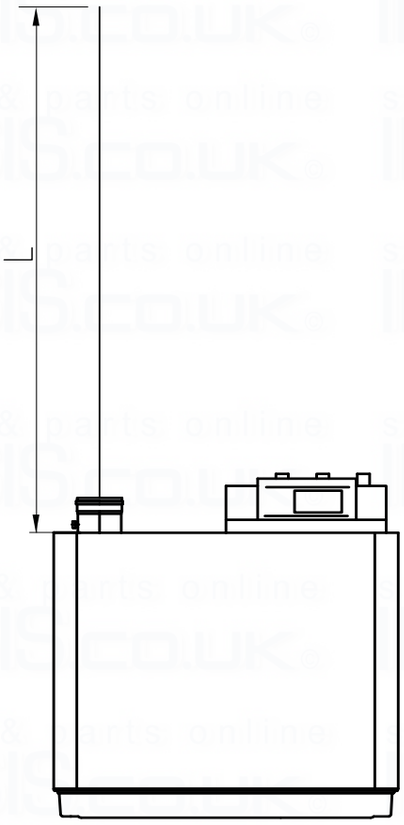

fig. 05 Piping for the conventional room ventilated

For each additional 90° or 45° bend, the pipe length must be reduced by the amount shown in *table 02*.

D in mm		length in m	
		90° bend	**45° bend**
Ø 100	R=½D	4.9	1.4
Ø 110	R=½D	5.4	5.1
Ø 130	R=D	1.8	1.0
Ø 150	R=D	2.1	1.2
Ø 180	R=D	2.5	1.4

table 02 *Metres to be deducted per bend*
The room sealed installation is based on the use of an air supply

7.3 Room sealed installation

pipe connected directly to the boiler. This increases the number of installation options within a building, while the discharge location is subject to less stringent requirements because the air supply and flue gas discharge can be incorporated in the same pressure field. Additional ventilation will be required to the room/compartment in accordance with BS 6644-2005 (compartment ventilation).
In addition, air from outside is usually cleaner, which has a beneficial effect on the boiler service life. An air supply and flue gas discharge table for the enclosed version of the boiler can be found *in table 03.* For discharge in two different pressure fields, see *Section 7.3.2.*

⚠ The boilers can be installed on a flue dilution system, but must have a total flue break to avoid boiler controls being af fected by the flue dilution fan pressures. For full details please contact Broag.

7.3.1 Possible lengths for the air supply and flue gas discharge

Room sealed appliance, type C33 according to CE.

Maximum acceptable flue gas discharge/air supply pipe lengths (L) in m			
Boiler Model	**Pipe Ø D (mm)**	**Calculated with concentric roof feed-through $D_{nominal}$ (mm)**	**[m]**
210-80	100	100	8
	130	130	+
	130	150	+
	150	150	+
210-120	100	100	3
	130	130	22
	130	150	25
	150	150	+
210-160	130	150	11
	150	150	22
	180	150	+
210-200	130	130	4
	150	150	13
	180	150	+

table 03 *Air supply and flue gas discharge table for the enclosed version*

+ = Lengths up to 30m possible. For longer lengths, consult our Technical department

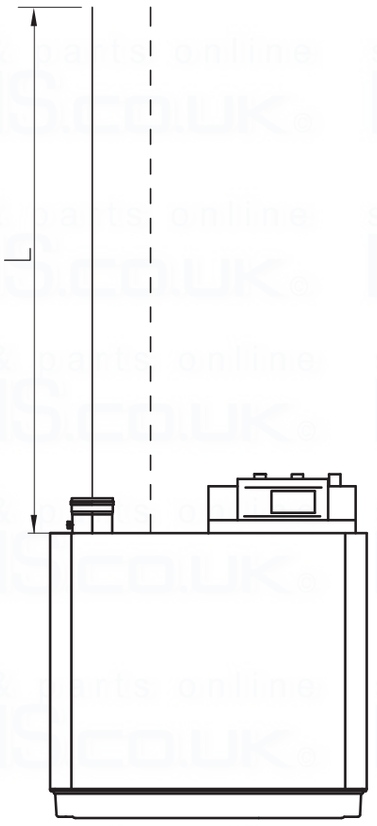

fig. 06 Piping for the room sealed appliance

When air supply and flue gas discharge pipes with diameters other than 150 mm are used, adapters are required: Ø150/100mm, Ø150/110mm, Ø150/130mm or Ø150/180mm and, for connection to our standard combined vertical roof feed-through sets, also Ø180/150mm, Ø130/150mm or Ø110/150mm.

For each additional 90° or 45° bend, the pipe length must be reduced by the amount shown in *table 04*.

D in mm		length in m	
		90° bend	**45° bend**
Ø 100	R=½D	4.9	1.4
Ø 110	R=½D	5.4	5.1
Ø 130	R=D	1.8	1.0
Ø 150	R=D	2.1	1.2
Ø 180	R=D	2.5	1.4

table 04 *Metres to be deducted per bend*

For enclosed versions, combined vertical roof feed-through sets are available, as well as sealing plates for flat roofs, in accordance with the following drawings. Please consult our Technical department for this option.

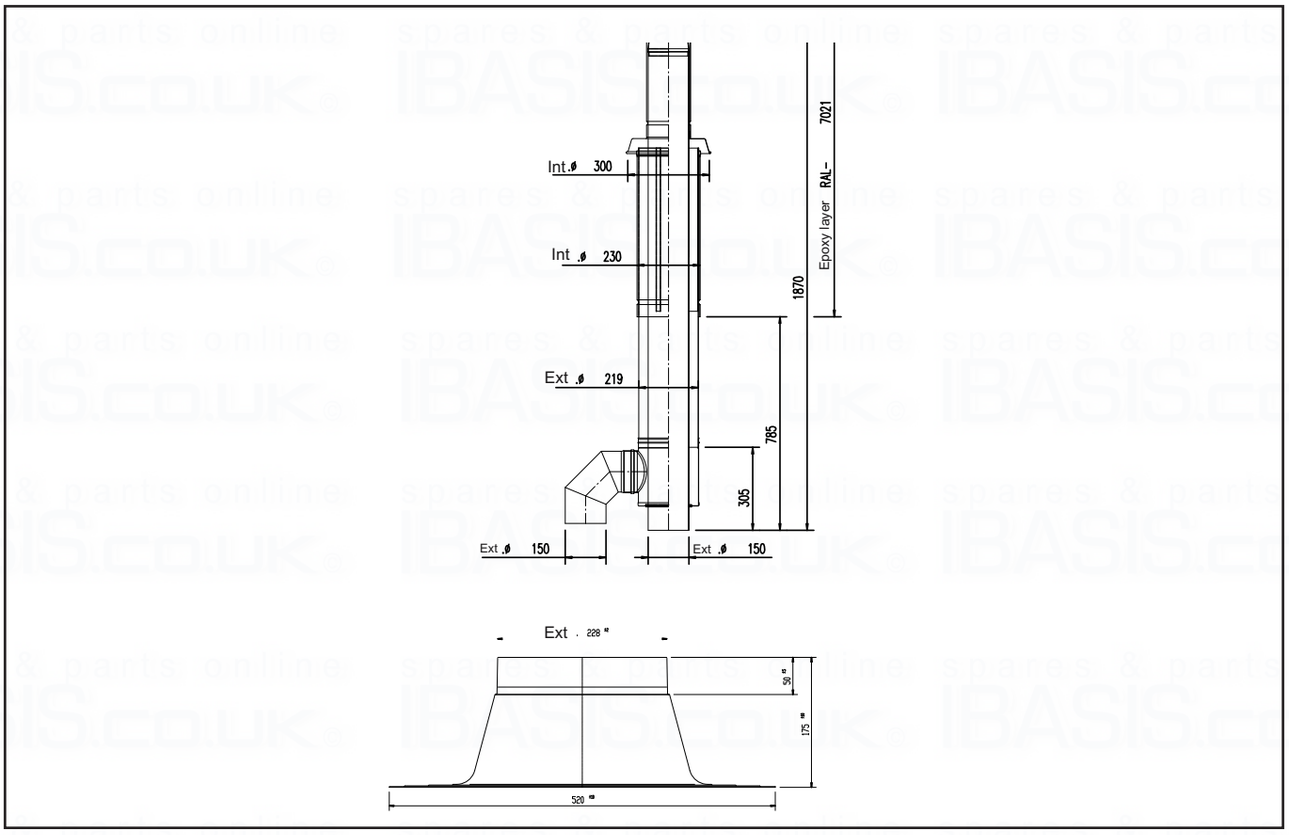

fig. 07 *Vertical roof feed-through for room sealed operation*

Pdf dakdoorvoer

7.3.2 Discharge in different pressure areas

For installations where supply and discharge points are in two different pressure zones CLV system please contact Broag Technical Dept. for further details and advice. The maximum acceptable height difference between combustion air supply and flue gas discharge is 36 m and the maximum acceptable length of the air supply and flue gas discharge combined is shown in *table 05.*

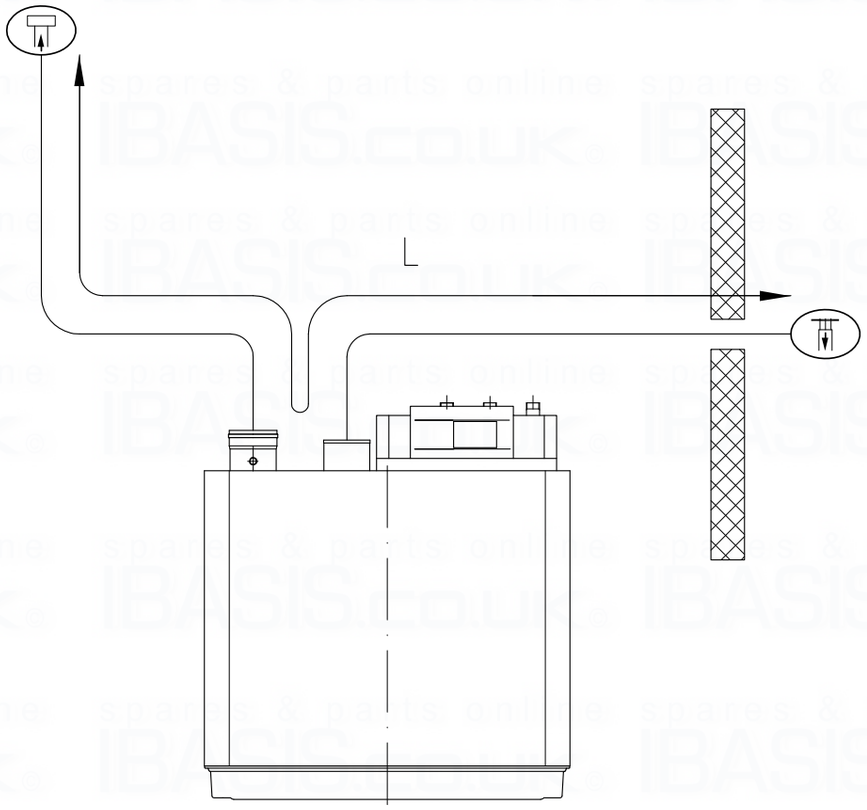

fig. 08 Discharge in different pressure areas

Maximum permitted flue gas discharge and air supply pipe lengths		
Boiler model	**D in mm**	**L in m**
210-80	150	36
210-120 150		36
210-160 150		23
210-200 150		11

table 05 *Air supply and flue gas discharge table for 'simplified CLV system'*

7.3.3 Connection of flue gas discharge and choice of material

Connecting the flue gas discharge:
Remove the cap from the flue gas discharge opening ;
- Fit the flue gas discharge pipes seamlessly together.

- Seams and joints must be airtight and watertight or fit seamlessly.
- Horizontal parts must be oriented towards the boiler at a gradient (min. 5 cm per metre).
- Connect the pipes stress-free.
- Flue gas discharge pipes longer than 2 m must be fixed separately and must not rest on the boiler.

Flue gas discharge:
Material:
Rigid single walled: stainless steel (316), aluminium or plastic (to comply with building regulations).
Flexible: stainless steel (316).
Construction: all joints and seams should be gastight and watertight with the horizontal runs graded towards the boiler (min. discharge 5 cm per meter) to allow condensate free drainage to the boiler. Flue gas discharges longer than 2 meters must be supported independently and may not rest on the boiler.
The flue outlet should terminate with reduction cone and bird guard only (chinamans hat or GLC type terminals etc. should not be used).

7.3.4 Air supply connection and choice of material

Connecting air supply:
Remove air supply grille from the air supply opening ;
- Fit the air supply pipes seamlessly together.

- Seams and joints must be airtight and watertight or fit seamlessly.
- Horizontal parts must be oriented towards the discharge at a gradient (min. 5 cm per metre).
- Connect the pipes stress-free.

Air supply:
Material:
Single walled, rigid or flexible: aluminium, stainless steel and plastic (to comply with building regulations).
Air supply ducts longer than 2 meters must be supported independently and may not rest on the boiler air inlet. Care must be taken to ensure that if water is able to enter the duct it will run away from the boiler air inlet connection or supply a suitable train c/w water seal trap.

8. Control and electrical connections

8.1 General

The boiler is equipped with electronic control and safety equipment with ionisation flame protection. The advanced boiler control (**abc®**), is a microprocessor that protects and controls the boiler. The boiler is fully prewired; all external connections are made on the terminal strips. Connect the boiler to the mains supply in accordance with the local electricity supplier's instructions and IEE regulations.

8.1.1 Boiler control

The heat output of the Remeha Gas 210 ECO **PRO** can be controlled as follows:
- **Modulating**, where the output modulates between the minimum and maximum values on the basis of the flow temperature defined by the modulating controller.
- **On/off control**, where the heat output modulates between the minimum and maximum values on the basis of the flow temperature set in the unit. This can be combined with an outside sensor so that the internal heating curve is used.
- **Analogue control** (0-10 V), where the heat output or temperature is controlled by a 0-10 V signal, *see Section 8.4.4*. Only possible with optional 0 - 10 V control PCB (IF-01).

8.1.2 Modulating controls general

The modulating nature of the boiler is used to maximum ef fect with a modulating controller based on room and/or outside temperatures. If the controller demands heat, the boiler supplies the heat output. If the controller demands a flow temperature, the boiler modulates to this value. This increases the number of operating hours and drastically reduces the number of starts. Combined with the fixed gas/air mixture, this results in greater ef ficiency.
Various types of modulating controls can be connected, including the following:
- Modulating room control, *see Section 8.1.3*;
- Modulating weather-compensated control *see Section 8.1.4*;
- Modulating cascade control, *see Section 8.1.5*.

8.1.3 Modulating room control

The boiler is set up for communication via the OpenTherm protocol. Modulating controllers can be connected according to the OpenTherm protocol, e.g. the Remeha Celcia 20. The controller is mounted in a reference area. Connection is made with a two-core cable to the **On/off - OT** terminals of terminal strip ***X6*** (not polarity sensitive).

8.1.4 Modulating weather-compensated control *rematic®*

The following optional controller can be supplied by Broag-Remeha. The controller is supplied with a connection adapter and interface that are built into the boiler. The connections for this feature are fully pre-wired.

rematic® 2945 C3 K
In addition to the weather-compensated boiler pre-control, this controller provides optimum start, dual zone weather compensation and priority DHW (if required). Fit the controller in the boiler . Connection takes place using the supplied ***rematic®*** adapter and the supplied interface that can be integrated in the control panel. Refer to the relevant controller documentation for detailed information.

8.1.5 Modulating cascade controller MC4

The Remeha Celcia MC4 cascade controller is suitable for the modulated control of 2 to 4 Remeha Gas 210 PRO boilers in cascade. This controller is wall-mounted and communicates according the OpenTherm protocol. We recommend using our Celcia MC4 modulating cascade controller in conjunction with the Celcia 20 Time/Weather compensation controller. Refer to the relevant controller documentation for detailed information.

☞ Celcia 20 with MC4 will only control up to 4 boilers in cascade

8.2 Electrical specifications

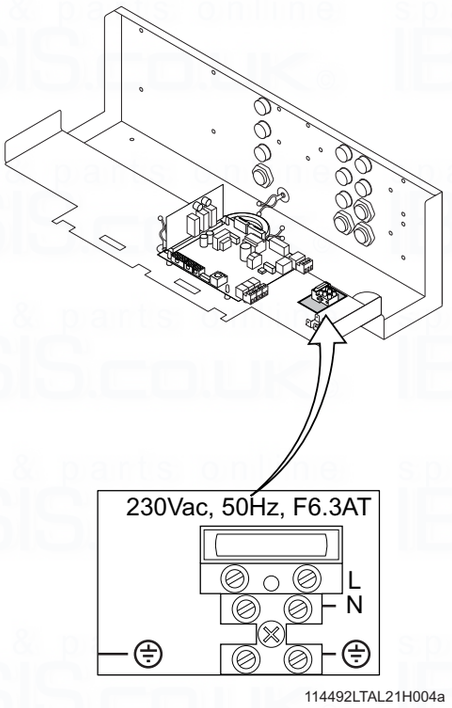

fig. 09 Connect mains lead

8.2.1 Mains voltage

The boiler is suitable for a 230 V -50 Hz supply with live/neutral/earth (the control is phase/neutral sensitive). Other connection values are only acceptable if an isolating transformer is installed. Connect the mains lead (not supplied) to the 230 V terminal strip.

8.2.2 Control box

Mains voltage : 230 V/50 Hz
Power consumption at: stand-by/low load/full load:
- 210-80 : 4 / 36 / 125 W
- 210-120 : 4 / 37 / 193 W
- 210-160 : 4 / 53 / 206 W
- 210-200 : 4 / 54 / 317 W

Safety time: 3.5 s
Anti-hunting time: Adaptive 1 - 10 minutes.
Pump post-circulation time: adjustable between 0 and 98 minutes or continuous (= 99 minutes), set by default to 3 minutes
Max. power consumption of external pump: 300 V A.

8.2.3 Fuse ratings

The 230 V terminal strip contains the fuse F - 6.3 AT.
This is a general fuse for all connected components.
The control unit contains the fuse F1 - 1.6 AT.
This is a fuse for the mains voltage of the control unit, gas multi-block and ignition, excluding pump.

8.3 Electrical connection options

The boiler has several control, protection and regulation connection options. The standard control PCB (PCU-01) can for example be expanded with:

- an optional 0 - 10 V control PCB (available as an accessory IF-01);
- and/or the optional expanded control/protection PCB (available as an accessory SCU-SO1).

To install or access these PCBs, the plastic cap must be removed from the control panel. The required external connections are made on these (optional) PCBs. The various connection options are detailed in the following sections.

8.3.1 Connection options of standard control unit (PCU-01)

Connected on the standard control unit (PCU-01) is the safety unit (SU) connected, which protects the boiler.

8.3.2 On/off control (OT)

The boiler is suitable for connection to a 'volt free' on/off controller. Connect the controller to the **On/off - OT** terminals of terminal strip X6 (not polarity sensitive).

8.3.3 Modulating controls (OT)

The boiler is set up for communication via the OpenTherm protocol. Modulating controllers can be connected.
Connection is made with a two-core cable to the **On/off - OT** terminals of terminal strip ***X6*** (it does not matter which wire is connected to which cable clamp).

8.3.4 External interlock (BL)

The boiler has an external interlock switch, so that the boiler can be shutdown in the event that this switch is not made. This input can be used in combination with a flue gas thermostat (available as an accessory). This input relates to the **BL** terminals of terminal strip ***X6***. Remove the wire bridge before using the input.
The input's behaviour depends on the parameter 33 setting:
1 = Normal shutdown;
2 = Shutdown without frost-protection (= default);
3 = Lock out.

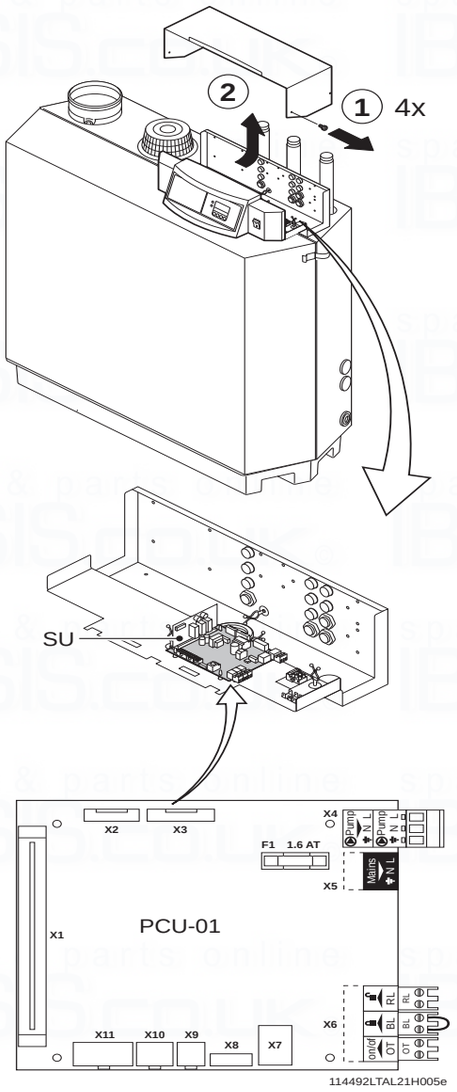

fig. 10 Standard control PCB (PCU-01) with safety unit (SU)

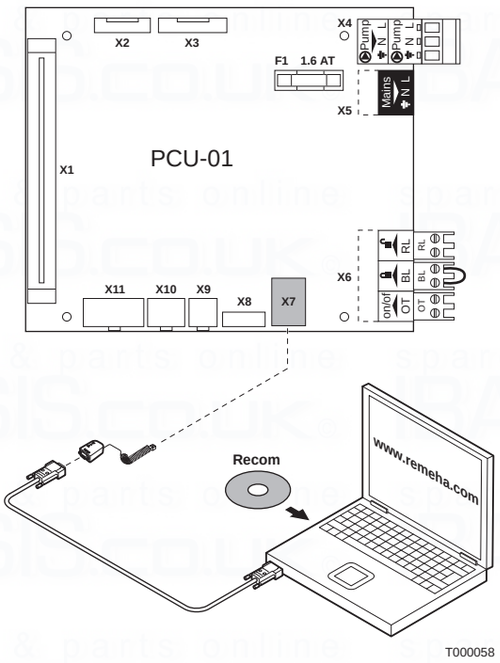

8.3.5 Input release (RL)

The boiler is also equipped with an input release so that the burner can be released/shutdown. This input can be used in combination with the limit switches on flue gas throttle valves, hydraulic control valves, safety interlocks, etc. This input relates to the **RL** terminals of terminal strip ***X6***.

8.3.6 Circulation pump (Pump)

A pump with the following specifications can be connected:
- On/off pump with a mains voltage of 230 V AC (50 Hz) and 300 VA (maximum).

Connect the pump to the **Pump** terminals of terminal strip ***X4***. The post-circulation time of the circulation pump at the end of a heat demand can be set according to requirements by means of a program option at user level, see *Section 9.1.6*.

8.3.7 Connecting a PC

Using the optional Recom interface package a PC can be connected to the X7 “telephone connector”.
Using the Recom software you can load, change and download various boiler settings and readings.
See the user instructions supplied with the software.

fig. 11 Connecting a PC

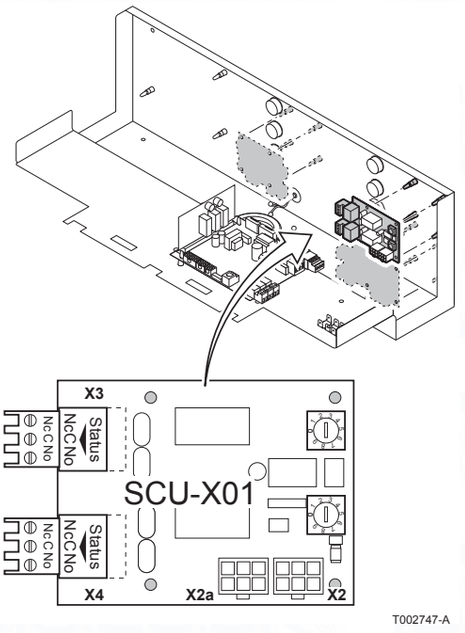

8.3.8 Connection options for the PCB - SCU - X01

The PCB - SCU - X01 is equipped with two potential-free outputs that have a capacity of max. 230 V AC/5 A reactive/2 A inductive (cos 0.6). It also has two rotary switches with ten positions.
See the table below for the rotary switch settings.

Nr	0	1	2	3	4	5	6	7	8	9
Description	Alarm	Alarm inverted = fail safe	Burning	Burning inverted	Burning low	Burning high	Service report	CH-mode	DWH-mode	CH-pump
Standby	C-NO	C-NC	C-NO	C-NC	C-NO	C-NO	**NA**	**NA**	**NA**	C-NO
Active	C-NC	C-NO	C-NC	C-NO	C-NC	C-NC	**NA**	**NA**	**NA**	C-NC

8.4 Connection options for 0 - 10 V control PCB (IF-01)

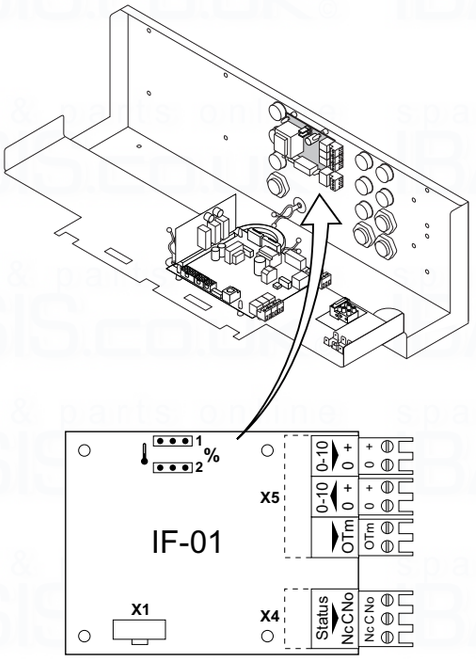

114492LTAL21H006a

fig. 12 Jumper 2

8.4.1 Connection status (Nc)

If the boiler locks out, a relay is de-energised and the alarm can be transmitted via a potential-free contact (maximum 230 V, 1 A) on terminals **Nc** and **C** of terminal strip ***X4***.

8.4.2 OTm connection

The interface uses OpenTherm to communicate with the boiler control. The **OTm** connection on terminal strip ***X5*** must therefore be connected to the OpenTherm OT input of the boiler control.

remeha

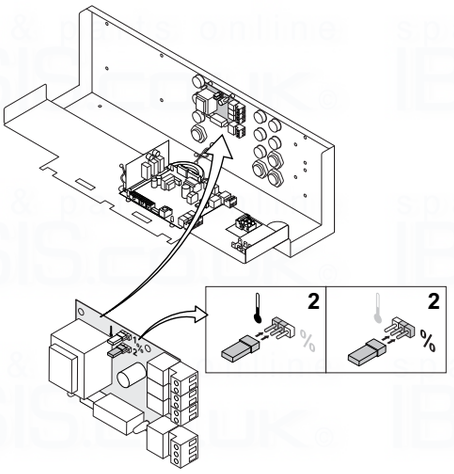

fig. 13 Jumper 2

8.4.3 Analogue input (0 - 10 V)

This control can be based on temperature or heat output (optional). The two controls are described briefly below. Connect the 0 - 10 V signal to the interface input for analogue control.

Analogue temperature-based control (🌡)

The 0-10 V signal controls the boiler flow temperature between 0°C and 100°C. This control modulates on the basis of flow temperature, where the heat output varies between the minimum and maximum values on the basis of the set point flow temperature calculated by the controller.

Jumper (**2**) on the interface is used to select either temperature (🌡) or boiler output (**%**) control.

Jumper 2	Input signal [V]	Temperature [°C]	Description
🌡	0 - 1,5	0 - 15	Boiler off
	1,5 - 1,8	15 - 18	Hysteresis
	1,8 - 10	18 -100	Desired temperature

table 06 *Analog input signal for temperature*

Analogue output-based control (**%**)

The 0-10 V signal controls the boiler output between 0% and 100%, where the minimum and maximum values are limited. The minimum output is linked to the boiler's modulation depth. This control is output modulated, where the output varies between the minimum and maximum values on the basis of the value defined by the controller.

Jumper 2	Ingput signal [V]	Boiler output [%]	Description
%	0 - 2,0*	0 - 20	Boiler off
	2,0 - 2,2*	20 - 22	Hysteresis
	2,0* - 10	20 -100	Desired boiler output
* Dependent on the minimum modulation dept (fan rotation speeds settings, pre set 20%)			

table 07 *Analogue input signal for boiler output*

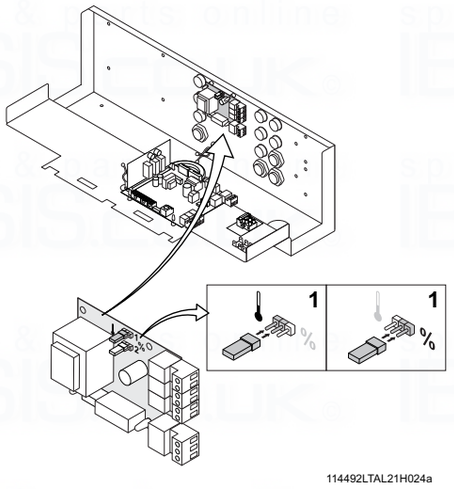

fig. 14 Jumper 1

8.4.4 Analogue output (0 - 10 V)

If this feedback message is received, temperature or heat output can be selected. The two are described briefly below.

Jumper (**1**) on the interface is used to select either temperature (🌡) or boiler output (**%**).

Jumper 1	Output signal [V]	Temperature [°C]	Description
🌡	0,5	-	Alarm
	1- 10	10 - 100	Delivered temperature

table 08 *Analogue output signal for temperature*

Jumper 1	Output signal [V]	Boiler output [%]	Description
%	0	0 - 15	Boiler off
	0,5 15	- 18	Alarm
	2,0* - 10	20 - 100	Delivered boiler output
* Dependent on the minimum modulation dept (fan rotation speeds settings, pre set 20%)			

table 09 *Analogue output signal for boiler output*

8.5 Connection options of the optional expanded control/protection PCB (SCU-SO1)

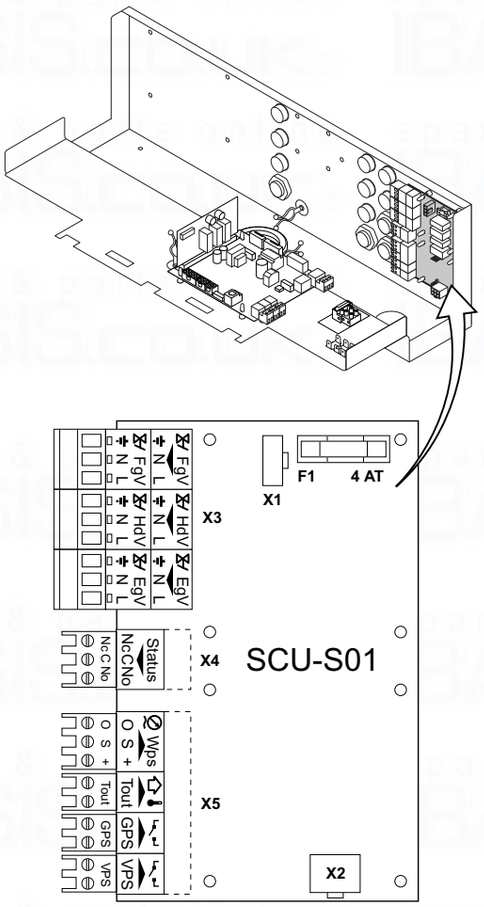

fig. 15 Expanded control/protection PCB (SCU-SO1).

8.5.1 Flue gas damper control (FgV)

In a cascade configuration, a flue gas damper (available as an accessory) prevents flue gases from being discharged through a non-operating boiler, with flue gas cascade. Therefore, the boiler is suitable for flue gas overpressure systems. Consult our Technical department. Connect the flue gas damper to the **FgV** terminals of terminal strip ***X3***. Also fit this flue gas damper if flue gases flow back when the boiler is in stand-by mode.
The running time of the flue gas damper must be programmed with parameter **29**.

8.5.2 Hydraulic valve control (HdV)

In a cascade configuration, a hydraulic valve prevents heat loss when the boiler is not running. Connect the hydraulic valve to the **HdV** terminals of terminal strip ***X3***. The running time of the hydraulic valve must be programmed with parameter **28**.

8.5.3 External gas valve control (EgV)

If there is a heat demand, an alternating voltage of 230 V 1 A (maximum) becomes available on the **EgV** terminals of terminal strip ***X3*** to control an external gas valve. The voltage is switched off when the gas multiblock on the boiler closes.

8.5.4 Operation signal and failure signal (Nc / No)

The alarm or operation signal is selected using the relevant parameter **25**, *see Section 9.1.6.* If the boiler is operational, the alarm or operation signal can be switched via a potential-free contact (maximum of 230 V, 1 A) on the **No** and **C** terminals of terminal strip ***X4***. If the boiler locks out, the alarm can be transmitted via a potential-free contact (maximum 230 V, 1 A) on terminals **No** and **C** of terminal strip ***X4***.

8.5.5 Water pressure sensor (Wps)

The water pressure sensor (available as an accessory) shuts the boiler down when the minimum water pressure (0.8 bar) is reached. To activate the water pressure sensor, a minimum pressure must be set with parameter **26** (factory setting 0 = off, see *Section 9.1.6.*) The pump does not run during this shutdown.

Connect the water pressure sensor to the **Wps** terminals of terminal strip ***X5***.
0 = Earth or neutral of the power supply
S = Signal or output from the sensor
+ = Supply voltage

8.5.6 Outside temperature sensor (Tout)

To take advantage of the boiler's modulating operation during the entire heating season, a Remeha outside temperature sensor (available as an accessory) can be used in combination with an on/off control or connection. Connect the on/off control or connection to the **On/off** terminals of terminal strip ***X6*** on the standard control PCB (PCU-01) and the outside temperature sensor to the **Tout** terminals of terminal strip ***X5*** on the optional expanded control/protection PCB (SCU-SO1). The unit modulates with a heat demand from the controller or because of a connection to a flow temperature corresponding to the outside temperature (*see heating curve graph*).

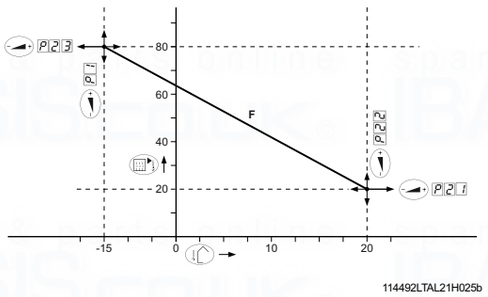

fig. 16 Heating curve graph

F = factory setting

Fitting the outside temperature sensor
Fit the external sensor, protected against direct sunlight, to the north or north-west of the building, at a height of at least 2.5 metres from ground level. Do not fit the outside temperature sensor near windows, doors, ventilation grills and extractors, etc.

Heating curve setting
The maximum flow temperature setting is also the setting for the 'top' of the heating curve, i.e. the required flow temperature for an outside temperature of -15°C. The baseline of the heating curve is also adjustable and can be changed at service level, see *Section 9.1.6*. A linear relationship exists between the outside temperatures mentioned and the corresponding flow temperatures.

8.5.7 Minimum gas pressure switch (Gps)

The minimum gas pressure (available as an accessory) switch shuts the boiler down if the inlet gas pressure becomes too low . Connect the minimum gas pressure switch to the **Gps** terminals of terminal strip ***X5***. The presence of the gas pressure switch must be activated using parameter 27 in the setting mode (see *Section 9.1.6*).

8.5.8 Gas leakage control (VPS; only for 210- 160 and 210- 200 boilers)

The gas leakage control checks and controls the safety valves on the gas block via a VPS system. The test takes place when the boiler starts. In the event of a leak in the gas block, the boiler will lock out. Connect the gas leakage control to the **VPS** terminals of terminal strip ***X5***. The presence of a gas leakage control must be entered using parameter 31, see *Section 9.1.6*.

8.5.9 Wiring diagram

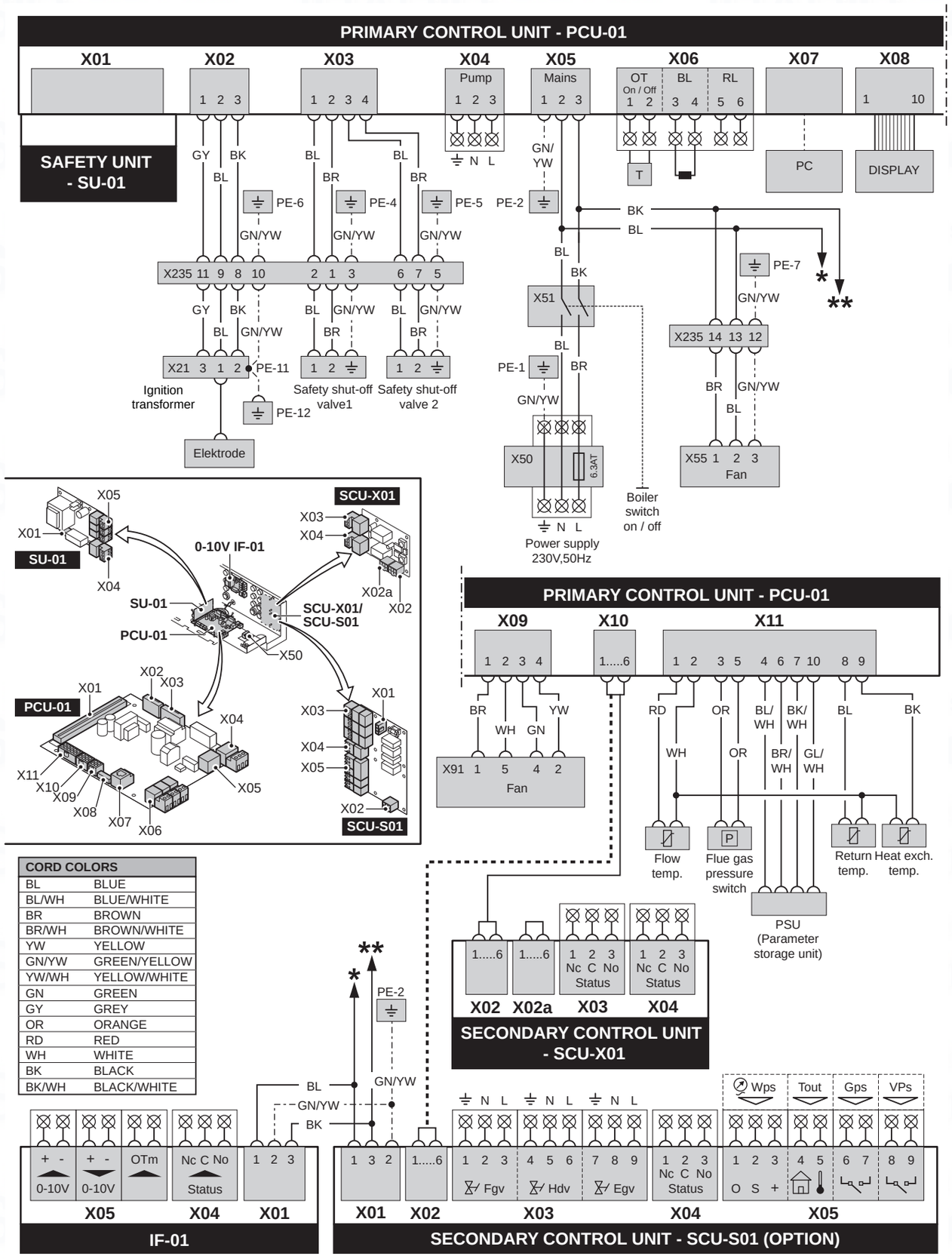

9 Commissioning

9.1 Control panel

The boiler's control panel contains four function keys, a menu key , a service engineers key, an on/off switch and a display.

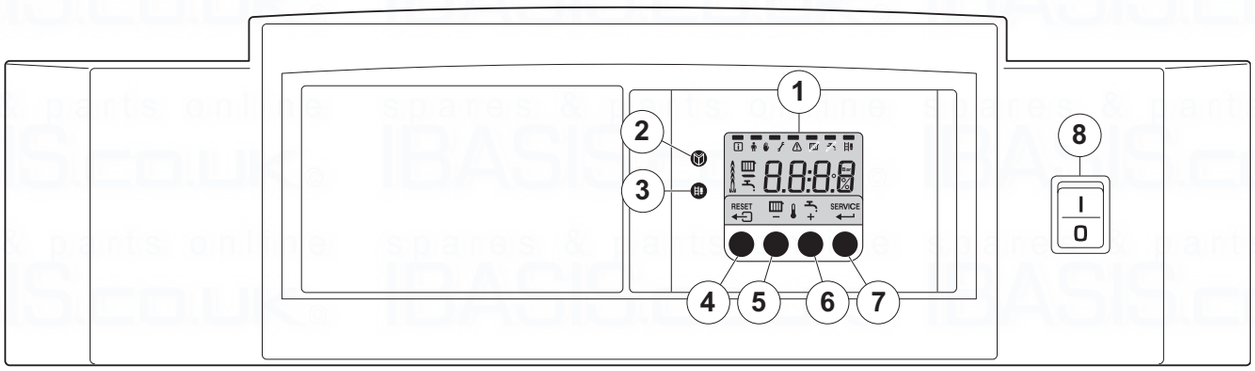

fig. 17 Control panel

1 = Display
2 = [Menu] key
3 = [Service engineers] key
*4 = [Escape] or **[reset]** key*
*5 = [Central heating temperature] or **[-]** key*
*6 = **[+]** key*
*7 = **[enter]** key or [Service] indicator*
8 = On/off switch

The display has four positions and several symbols and provides information about the operating status of the boiler and any faults. Numbers, dots and/or letters may be shown. The symbols in the display above the function keys indicate what the function of the relevant keys is at that moment. If no key is pressed for three minutes, the display lighting switches off and only the and symbols are displayed. Press any key; the current boiler status and the current operating code appear on the display. This is always displayed in the event of a fault.

9.1.1 Normal start-up procedure

Switch on the mains supply to the boiler; the Gas 210 ECO **PRO** will perform the start-up program.
The following will appear in succession in the display:
- a short display test, whereby all of the display's segments are visible;
F:XX software version alternating with Init;
P:XX parameter version;

- Afterwards (depending on the operating status), the following may appear on the display:
N : L (flashes) : live and nutral wires are wrongly connected; change wires on the 230V terminal strip!

With a heat demand:	
1	Boiler starts
2	Burner starts
3	Central heating operation; briefly in part load then in full load
When a heat demand ceases:	
5	Burner stops
6	Boiler stops
0	Stand-by mode

table 10 *Normal operation*

9.1.2 Fault during start-up procedure

If nothing appears on the display, check:
- the connection of the mains lead;
- the main fuse in the instrument box (F = 6.3 AT, 230 V);
- the fuse on the control unit (F1 = 1.6 AT, 230 V);
- the mains voltage.

- A fault code in the display is recognised as follows: the fault symbol ⚠ appears and the fault code flashes underneath it;
- The meaning of this fault code can be found in the fault table, *see Section 11.2.*
- If possible, solve the fault first.
- Press the **RESET key** for 3 seconds to restart the Gas 210 ECO **PRO**.

☞
If the display does not show RESET but SERVICE, the boiler must be switched off and switched on again after 10 seconds before the fault can be reset.

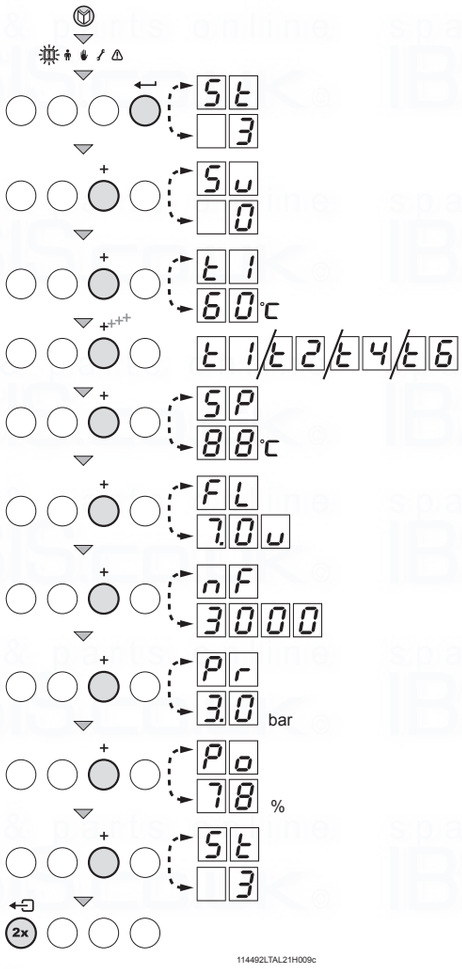

fig. 18 Reading current values

9.1.3 Reading current values

The following current values can be read in the 'information menu' i

- St = Status
- Su = Sub status
- t1 = flow temperature [°C];
- t2 = return temperature [°C];
- t4 = outside temperature [°C]; (only if outside sensor is connected)
- t6 = boiler block temperature [°C];
- SP = internal set point [°C];
- FL = ionisation current [µA];
- nF = fan rotation speed [rpm];
- Pr = water pressure [mbar];
- Po = relative output supplied [%];

The current values can be read as follows:

- Press the **key**, the i symbol will then flash, confirm with the ↵ **key;**
- Press the **[+] key** again so that St appears alternating with 3, the actual status;
- Press the **[+] key** again so that Su appears alternating with 0, the actual sub status;
- Press the **[+] key** again so that t1 appears, alternating with, for example, 60°C, the actual flow temperature;
- Press the **[+] key** repeatedly so that the remaining temperatures also appear;
- Press the **[+] key** again so that SP appears, alternating with, for example, 88°C, an internal set point;
- Press the **[+] key** again so that FL appears alternating with, for example, 7.0 u, the actual ionisation current;
- Press the **[+] key** again so that nF appears alternating with, for example, 3000 (rpm), the actual fan rotation speed;
- Press the **[+] key** again until Pr appears alternating and, for example, 3.0 bar, the actual water pressure (if no water pressure sensor is connected, --.- bar appears);
- Press the **[+] key** again until Po appears and, for example, 78 %, the actual modulation percentage;
- Press the **[+] key** again, the read-out cycle starts again with St, etc;
- Press the ⇐ **key** twice to return to the display with the current operating status.

9.1.3.1 Status and sub status

In the 'information menu' [i] the following status and sub status numbers are displayed:

Status St		Sub status Su	
Number	**Status**	**Number**	**Sub status**
0	Stand-by mode	0	Stand-by mode
1	Boiler starts (heat demand)	1	Anti-hunting
		2	Open hydraulic valve
		3	Start pump
		4	Wait for the correct temperatures for burner start
2	Burner starts	10	Open external gas valve
		11	Fan running
		12	Open flue gas damper
		13	Pre-ventilation
		14	Wait for release signal
		15	Burner on
		16	VPS gas leakage control
		17	For ignition
		18	Main ignition
		19	Flame detection
		20	Intermediate ventilation
3	Burning on central heating operation	30	Temperature control
		31	Limited temperature control (ΔT safety)
		32	Output control
		33	Increase protection level 1 (control modulation)
		34	Increase protection level 2 (part load)
		35	Increase protection level 3 (shut down)
		36	Modulate up for flame control
		37	Stabilisation time
		38	Cold start
5	Burner stop	40	Burner off
		41	Post ventilation
		42	Fan running
		43	Close flue gas damper
		44	Stop fan
		45	Close the external gas valve
6	Boiler stop (end of heat demand)	60	Pump post circulation
		61	Pump off
		62	Close hydraulic valve
		63	Start anti-hunting
8	Control stop	0	Wait for burner start
		1	Anti-hunting
9	Shutdown	xx	Shutdown xx

table 11 *Settings at service level*

9.1.4 Adjusting the boiler to the system

The boiler's control parameters are set to the most common central heating systems. With these settings, practically all central heating systems will work well. However, the user or the installer can optimise the parameters as he/she wishes.

remeha

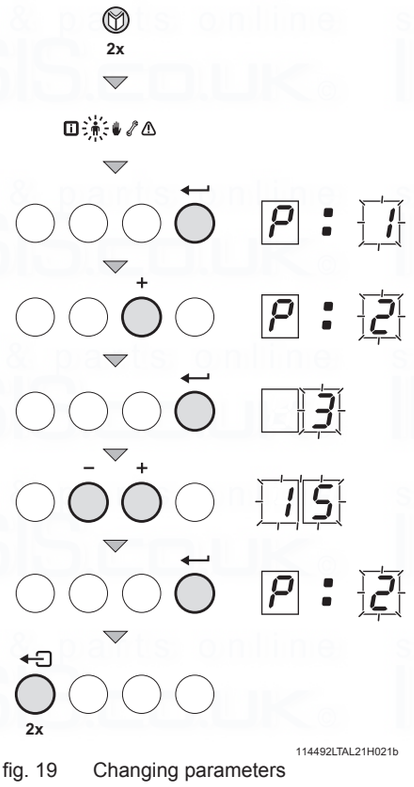

fig. 19 Changing parameters

9.1.5 Changing parameters at user level (without access code)

The following settings can be changed at user level:

P1 = Flow temperature set point [°C], adjustable between 20 and 90°C;
P2 = Pump post-circulation time 0..98 mins, 99 is continuous;
P3 = Boiler control; central heating on/off.
0 = Central heating off
1 = Central heating on (= factory setting)
P4 = Display options
0 = Simple display
1 = Comprehensive display
2 = Display automatically goes to simple after three minutes (factory setting)

* Consult our Technical department for further information and demands on the system.

The parameters can be changed at user level as follows:

1. Press the **-key** several times until the symbol flashes in the menu bar;
2. Select the users menu using the **-key**, P:1 appears (the 1 flashes);
3. Press the [**+**]-key; P:2 appears (the 2 flashes);
3. Press the **-key** again; 3 (min) appears and flashes: (factory setting);
4. Change the value by pressing the **[-] -key** or the **[+] -key**, in this case for example to 15 min, with the **[+] -key**;
5. Confirm the value with the **-key**, P2 appears (the 2 flashes);
6. Press the **- key** twice, the boiler enters the current operating status.

The P1 to P4 settings can be changed in the same way as P2.

9.1.6 Changing parameters at service level (with access code)

To prevent undesired settings, some parameter settings can only be changed after the special access code 12 is entered. This code may only be used by qualified installers.
The following settings can be changed at user and service levels:

Codes in display		Description	Setting range and possible explanation	Factory setting			
				210-80	210-120	210-160	210-200
May also be changed by users	1	Flow temperature set point	20 - 90°C	80			
	2	Pump post-circulation time	0 – 98 minutes 99 = continuous	3			
	3	Boiler control	0 = Central heating off 1 = Central heating on	1			
Can only be changed by the installer	4	Display	0 = Simple display 1 = Comprehensive display 2 = Display automatically goes to simple	2			
	17	Maximum speed central heating (natural gas)	10 - 70 x 100 rpm	51	64	48	57
	18	Minimum speed central heating and hot water (natural gas)	10 - 40 x 100 rpm **Do not change ***	12	13	10	12
	19	Starting speed (natural gas)	10 - 40 x 100 rpm **Do not change ***	17			
	20	Maximum flow temperature CH	20 - 90°C	90			
	21	Base point heating curve outside temperature	0 - 30°C (only with external sensor)	20			
	22	Baseline of flow temperature heating curve	0 - 90°C (only with external sensor)	20			
	23	Outside temperature climate point heating curve	-30 - 0°C (only with external sensor)	- 15			
	24	Outside temperature for frost protection	-30 - 0°C (only with external sensor)	- 10			
	25	Fault relay function (available as an accessory)	1 = Alarm signal 0 = Operation signal	0			
	26	Minimum water pressure (available as an accessory)	1 - 60:10 bar (only with water pressure sensor) 0 = off	0			
	27	Minimum gas pressure check (available as an accessory)	0 = Off 1 = On (only with a minimum gas pressure sensor)	0			
	28	Hydraulic valve running time (available as an accessory)	0 = no waiting time 1 – 255 s (only if connected)	0			
	29	Flue gas damper running time (available as an accessory)	0 = no waiting time 1 – 255 s (only if connected)	0			
	30	Maximum time for release	0 = no waiting time 1 – 255 s (only if connected)	0			
	31	VPS gas leakage control (available as an accessory)	0 = off 1 = on (only with leakage control)	0			
	32	Mains detection phase	0 = Off 1 = On	0			
	33	External interlock function (available as an accessory)	1 = Normal shutdown 2 = Shutdown without frost-protection 3 = Lock out	2			
	Ad	Automatic detection of optional hardware	0 = No 1 = Yes, once	0			
	dF and dU	Resetting factory settings	The type plate states the value of dF (X) and dU (Y); setting these values resets the factory settings.	X			
				Y			

table 12 *Settings at service level*

* Change this parameter when converting to flue gas cascade and LPG gas (please refer to Broag).

remeha

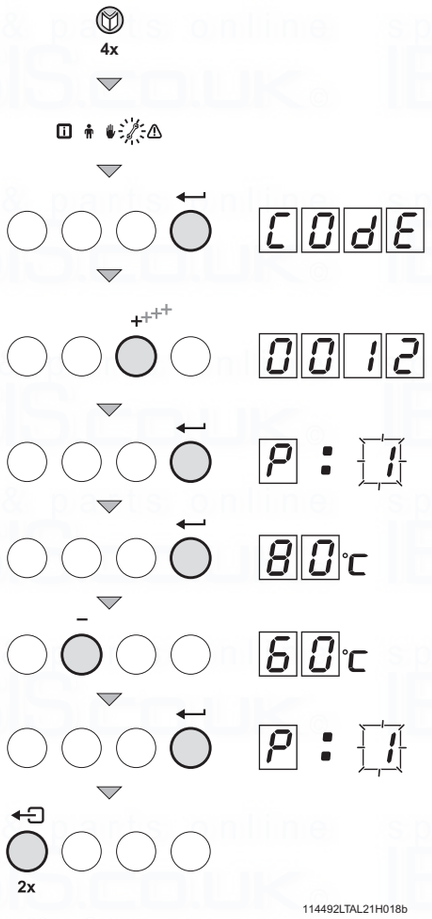

fig. 20 Setting service code

- The parameters at service level may only be changed by a qualified installer.
- Changing the factory settings can result in incorrect operation of the Gas 210 ECO **PRO**.

The parameters can be changed at service level as follows:

1. Press the **-key** several times until the symbol flashes in the menu bar;
2. Select the installers menu using the **-key**, CodE appears in the display;
3. Use the **[-] -key** or **[+] -key** to set installers code 0012;
4. Confirm with the **-key;** P1 appears;
5. Press the -**key** again; value 80°C appears (factory setting);
6. Lower the value, for example to 60°C, with the **[-] key;**
7. Confirm the value with the -**key**; P1 appears;
8. Set other parameters where required by selecting them with the **[-] -key** or **[+] -key**;
9. Press the - **key** twice, the boiler becomes operational.

Gas 210 ECO **PRO** also returns to operation if no keys are pressed for 10 minutes.

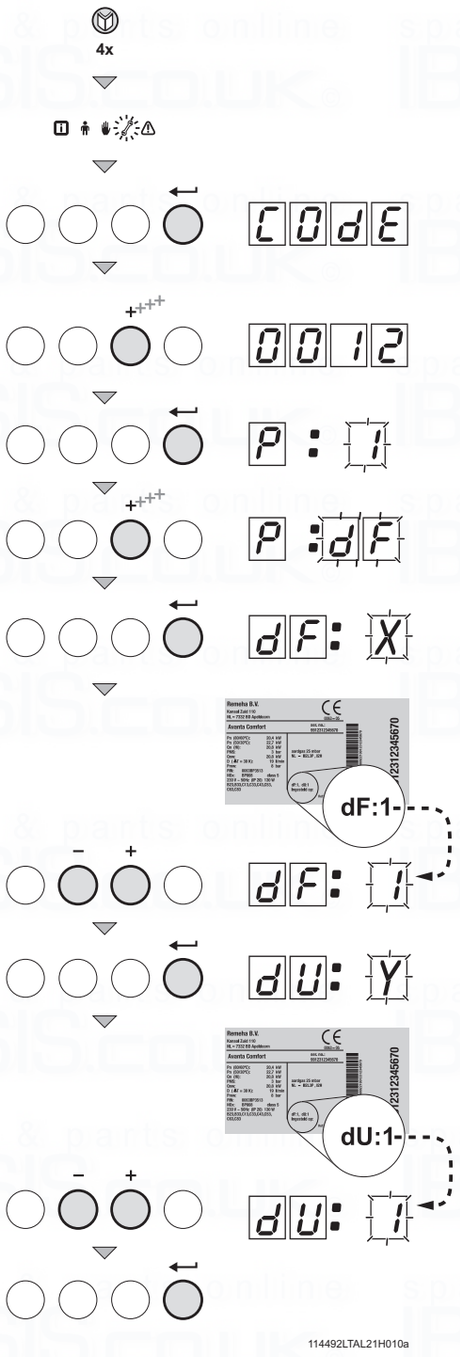

fig. 21 Resetting factory setting

9.1.7 Resetting factory settings

- Press the -key several times until the symbol flashes in the menu bar;
- Select the installers menu using the ⟵ **-key**, CodE appears in the display;
- Use the **[-] -key** or **[+] -key** to set installers code 0012;
- Confirm with the ⟵ **-key;** P1 appears;
- Press the **[+] -key** several times, dF: X appears;
- By default, the current value X for dF appears on the display; as a check, compare this with the value of X on the type plate; enter the value of X on the type plate with the **[-] key** or the **[+] key.**
- Press the ⟵ **key** again, dU: Y appears;
- By default, the current value Y for dU appears on the display; as a check, compare this with the value of Y on the type plate; enter the value of Y on the type plate with the **[-] key** or the **[+] key.**
- Press the ⟵ **key** to confirm the values; the factory settings have been reset.

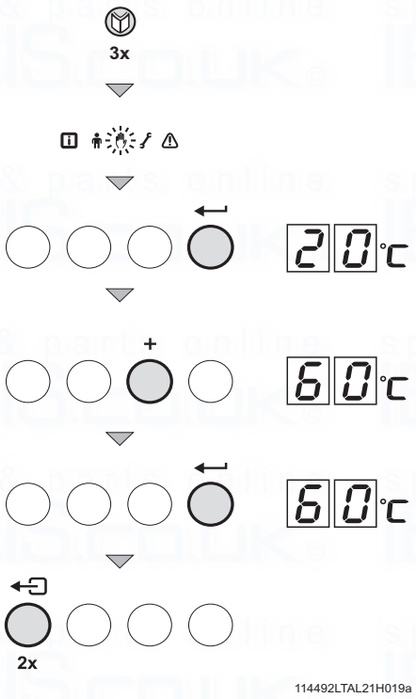

fig. 22 Setting manual operation

9.1.8 Setting manual operation (✋ symbol)

In some cases, it may be necessary to set the boiler to manual operation, for example when the controller has not yet been connected. The boiler can be set to automatic or manual operation under the ✋ symbol. Do this as follows:

- Press the **-key** several times until the ✋ symbol flashes in the menu bar;
- Press the ↵ **-key** once, either the minimum flow temperature or AUtO (only if an external sensor has been connected) will appear in the display; the flow temperature is determined by the internal heating curve;
- or 20°C (minimum flow temperature) will appear in the display;
- Press the **[+] -key** to increase this value in manual operation temporarily;
- Confirm with the ↵ **-key**;
- The boiler is now set to manual operation;
- Press the ↵ **-key** twice to exit manual operation; the boiler enters operating status.

☞ Manual operation keeps active after power breakdown.

9.2 Commissioning

⚠ Ensure that the boiler is disconnected from the power supply.

1. Remove front panel.
2. Open the main gas cock.
3. Check the electrical connections including earth.
4. Fill the boiler and the system with water (minimum pressure 0.8 bar).
5. Vent the system.
6. Fill the trap with clean water.
7. Check the flue gas discharge connection and air supply connection.
8. Vent the gas pipe (only vent pipework from gas isolation valve).
9. Open the gas cock in the gas pipe to the boiler.
10. Check the gas connection for leakage.
11. Switch on the mains supply to the boiler.
12. Adjust the boiler and any external controls to heat demand.
13. The boiler now starts to run.

Operation can now be monitored via the **code** window:

With a heat demand:
1 Boiler starts
2 Burner starts
3 Central heating operation; briefly in part load then in full load
When a heat demand ceases:
5 Burner stops
6 Boiler stops
0 Stand-by mode

15 Check and, if necessary, correct the gas/air ratio control setting.

☞ Perform the check at full load and minimum load for all boiler models. Only perform settings for the 210-80 and 210-120 models at minimum load. Perform settings for the 210-160 and 210-200 models at full load **and** minimum load. An electronic CO_2 or O_2 meter is required for checking and adjustment purposes. Check that the opening around the probe is properly sealed when meas urements are taken.

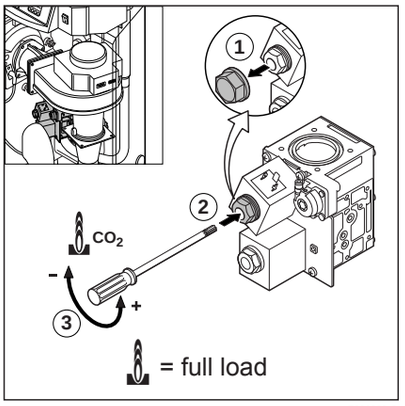

fig. 23 Setting values CO_2

15.**a** Set full load: press the **key**, the symbol appears in the menu bar; if **h:**3 appears in the display, full load has been set.

15.**b** Now measure the CO_2 percentage and compare it with the values in *table 13*. If the CO_2% level deviates from these values, set the CO_2 percentage using the screw under the cap of the V2 coil on the gas block (this can only be adjusted on the 210-160 and 210-200 models). Check the flame through the inspection glass (at full load): the flame must not blow off and the burner's surface must not be red hot.

Checking and setting values O_2/CO_2 for natural gas (H) at full load							
Boiler type	Fan speed (rpm)	CO_2	Control margin	Setting margin	O_2	Control margin	Setting margin
	Full load **h:**3	%	%	%	%	%	%
210-80	5100	8.8	± 0.7	n/a	5.2	± 1.3	n/a
210-120	6400	8.8	± 0.7	n/a	5.2	± 1.3	n/a
210-160	4800	8.8	± 0.5	± 0.3	5.2	± 0.9	± 0.5
210-200	5700	8.8	± 0.5	± 0.3	5.2	± 0.9	± 0.5

table 13 *Checking and setting values O_2/CO_2 for natural gas (front housing removed)*

Checking and setting values O_2/CO_2 for natural gas (H) at minimum load							
Boiler type	Fan speed (rpm)	CO_2	Control margin	Setting margin	O_2	Control margin	Setting margin
	Minimum load L:3	%	%	%	%	%	%
210-80	1200	9.3	± 0.7	± 0.3	4.3	± 1.3	± 0.5
210-120	1300	9.3	± 0.7	± 0.3	4.3	± 1.3	± 0.5
210-160	1000	9.3	± 0.5	± 0.3	4.3	± 0.9	± 0.5
210-200	1200	9.3	± 0.5	± 0.3	4.3	± 0.9	± 0.5

table 14 *Checking and setting values O_2/CO_2 for natural gas (front housing removed)*

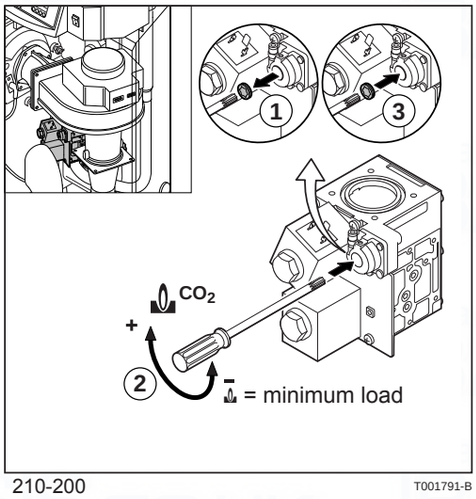

210-200 T001791-B

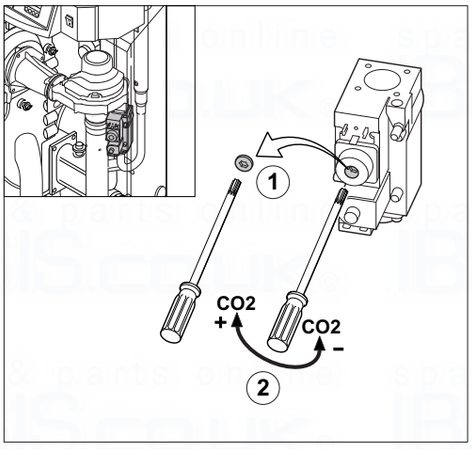

114492LTAL21H020a

fig. 25 Setting values CO_2 for 210-80 and 210-120 (only minimum load)

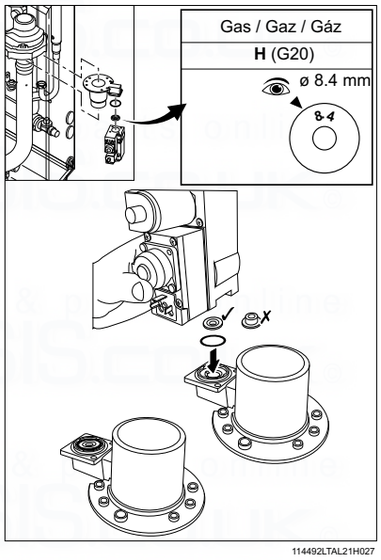

114492LTAL21H027

fig. 26 Check size and positioning of restrictor

15.**c** Set minimum load: press the **[-] -key** and, when L :3 appears in the display, minimum load has been set.

15.**d** After minimum output has been reached, check the CO_2 percentage and compare it with the value *in table 14.* If the CO_2% level deviates from these values, set the CO_2 percentage using the correction screw of the pressure controller on the gas block (for the 210-80 and 210-120 models, adjustments are only made at minimum load).

fig. 24 Setting values CO_2 for 210-160 and

The boiler is supplied with a number of basic settings.
burner control - modulating on the basis of flow temperature
maximum flow temperature - 80°C
If other values are required: *see Section 9.1.6*.

15.**e** Remove measuring equipment and seal measuring points.

16. Check gas leakage control (**VPS** if installed = available as an accessory):

Then set the gas leakage control pressure switch to a switch pressure equal to 50% of the inlet pressure. Check that the measured inlet pressure is not the (higher) closing pressure.

17. Press the **'reset'** key to reset the boiler to 'user level'.
18. Heat the system up to roughly 80°C if possible and switch the boiler off.
19. Vent the system and check the water pressure.
20. The boiler is now ready for operation.
21. Set the boiler control to the required values and write down the connected type of gas on the boiler type plate: e.g. G20 – 25 mbar.
22. Switch the boiler on.

If the CO_2% with the 210-80 and 210-120 still deviates on full load:
- adjust part load (see point 15.c and 15.d)
- check full load (see point 15.b) ; if the CO_2% deviation is still too large;
- check the size and placing of the restrictor (natural gas; 8.4 mm)

The following operating modes are now available:

23.**a** **Modulating operation:** The heat output of the boiler modulates on the basis of the flow temperature demanded by the modulating controller, see 'Note' in *point 22* and *Section 8.1.2*.

23.**b** **On/off operation:** the boiler modulates between minimum and maximum heat output on the basis of the flow temperature set in the boiler, see *Section 8.3.2*.

9.3 Taking the boiler out of operation

The boiler must be switched off for maintenance or repair work. If the central heating system is not going to be used for a long time (for example, during holidays in frost-free periods), it is advisable to put the boiler out of operation.

9.3.1 Boiler with frost protection, out of operation for a long time

- Set the controller low, for example to 10°C;

The Gas 210 ECO **PRO** will now only come into operation to protect itself against freezing, (= depending on parameter 33, *see table 11).*
To prevent radiators and the system from freezing in rooms where there is a risk of frost (e.g. garage or storage room), a frost thermostat can be connected to the boiler. The boiler will then keep the radiators in that room warm.

⚠
This frost protection does not work if the boiler is out of operation.

9.3.2 Boiler without frost protection, out of operation for a long time

- Isolate the mains power supply from the boiler;
- Close the boiler gas cock.

⚠
Drain the boiler and central heating system if you are not going to use your home or the building for a long time and there is a chance of frost.

10. Inspection and maintenance

10.1 General

The boiler is virtually maintenance free; it only has to be inspected once a year and only if necessary be serviced/cleaned.
The annual inspection of the boiler includes:
- **combustion check of the boiler** (the fan draws in the combustion air through the venturi. Clean the fan, venturi and burner if there are irregularities);
- **cleaning the trap;**
- **checking the ignition electrode;**
- **leakage check** (water, flue gas and gas)**;**
- **water pressure check**.

10.2 Combustion check of the boiler

Combustion is checked by measuring the O_2/CO_2 percentage in the flue gas discharge duct. To do this, heat the boiler to a water temperature of approx. 70°C. The measurements must meet the values set *in table 13.* The flue gas temperature can also be measured at the measuring point in the flue gas discharge duct. If the flue gas temperature exceeds the return temperature by more than 30°C, this can indicate that the heat exchanger is dirty.
If these checks show that combustion in the boiler or heat transmission is no longer optimum, corrective maintenance must be carried out in accordance with the instructions in *Sections 10.2.1 to 10.2.4*.

10.2.1 Corrective maintenance

This should include cleaning the fan, venturi, the heat exchanger and the burner. These parts must be cleaned in succession.
A service kit which contains gaskets and most used parts for maintenance is available as an accessory.

⚠
Work on the boiler
Disconnect the mains supply, close the main gas cock and allow the boiler to cool down before working on the boiler.

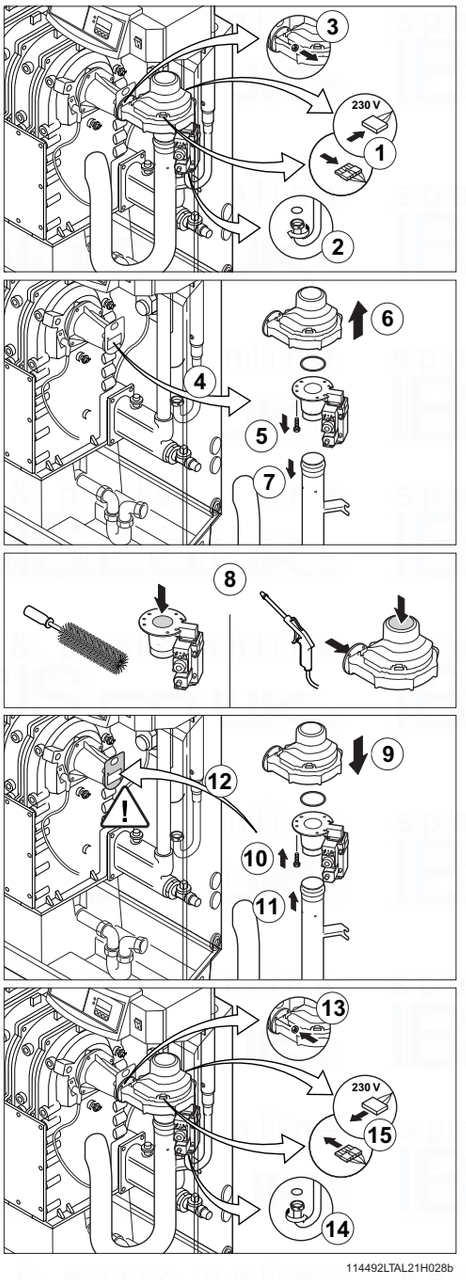

fig. 27 Cleaning the fan 210-80 and 210-120

10.2.2 Cleaning the fan

For the 210-80 and 210-120 versions:
Remove the electrical connections from the fan.

1. Unscrew the union nut under the gas multiblock (pay attention to the sealing).
2. Remove the bolts from the outlet side of the fan.
3. Remove the fan, including venturi and gas multiblock.
4. Remove the bolts on the inlet side of the fan.
5. Detach the venturi from the fan.
6. Clean the fan with a plastic brush.
7. Remove loose dust from the fan.
8. Re-attach the venturi to the fan.
9. Detach the air silencing tube from the venturi.
10. Clean the venturi with a plastic brush.
11. Refit all removed components; check the correct positioning of the gasket ring between fan and venturi.

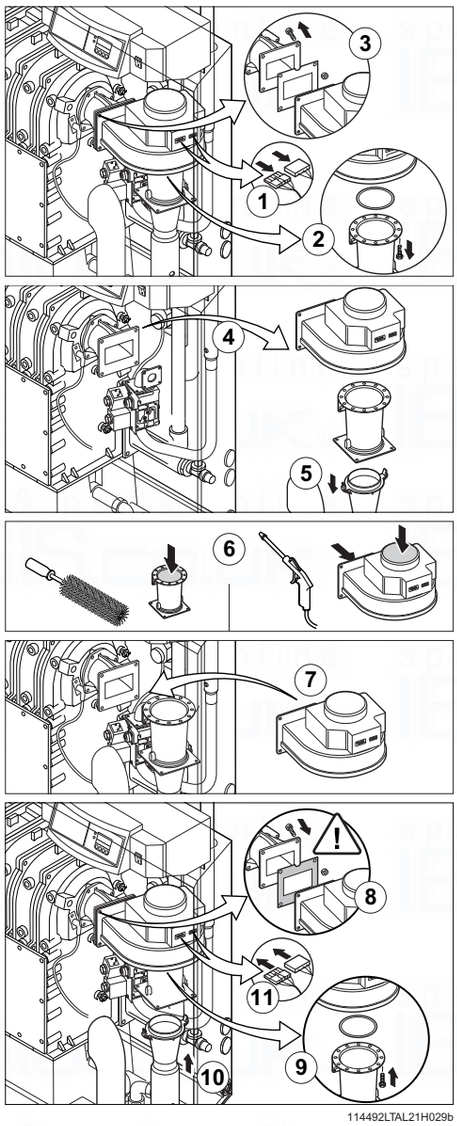

fig. 28 Cleaning the fan 210-160 and 210-200

For the 210-160 and 210-200 versions:

1. Remove the electrical connections from the fan.
2. Remove the bolts that fix the venturi on the fan.
3. Remove the bolts and the nuts from the outlet side of the fan.
4. Remove the fan (pay attention to the sealing).
5. Clean the fan with a plastic brush.
6. Remove loose dust from the fan.
7. Detach the air silencing tube from the venturi.
8. Clean the venturi with a plastic brush.
9. Refit all removed components; check the correct positioning of the gasket ring between fan and venturi.

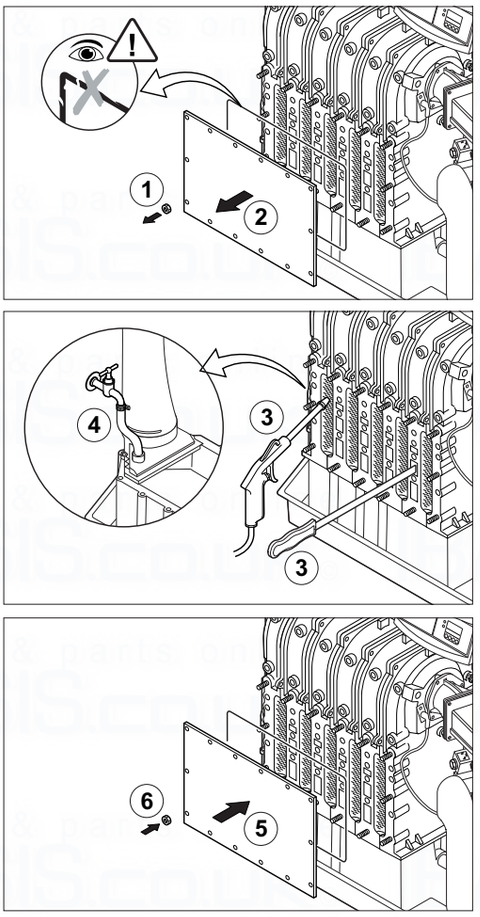

fig. 29 Cleaning heat exchanger

10.2.3 Cleaning the heat exchanger (flue gas side)

Caution: The sealing between the inspection hatch and heat exchanger may stick, as may the sealing between the burner and heat exchanger Prevent the sealing from tearing.
Damaged or hardened sealing must always be replaced.

1. Remove the nuts from the inspection hatch at the front of the heat exchanger.
2. Take the inspection hatch off the heat exchanger.
3. Clean the heat exchanger with special cleaning tool (available as an accessory) or compressed air.
4. Clean the condensate collector by removing the plug (in front of the flue gas discharge pipe) and rinsing the collector with water .
5. Now refit all removed components.

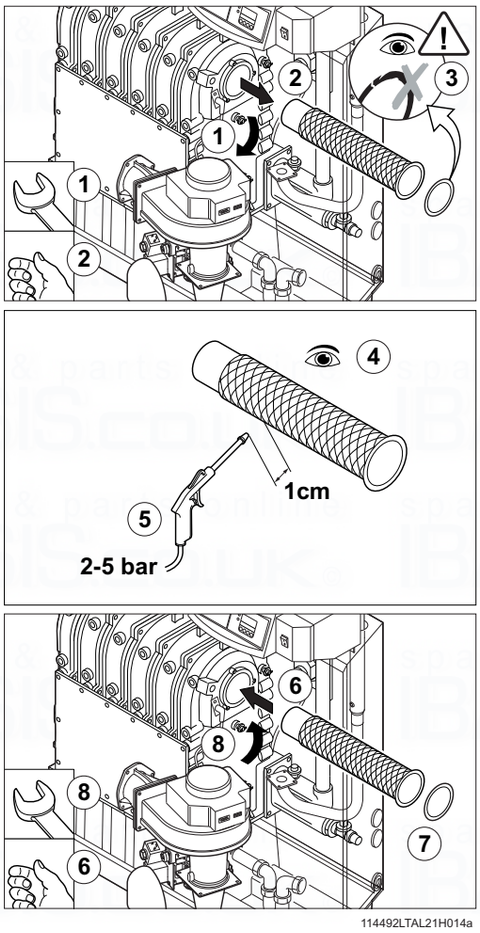

fig. 30 Cleaning burner

10.2.4 Cleaning the burner

1. Dismantle the burner.
2. Check burner visually and if necessary clean carefully with air (e.g. compressed air at between 2 and 5 bar , nozzle - burner distance approx. 1 cm).
3. Now refit all removed components.

Ensure that cables do not come into contact with hot boiler parts!

10.3 Cleaning the trap

Remove the trap from the boiler and clean it.
Fill the trap with fresh water and fit it.

10.4 Checking the ignition electrode

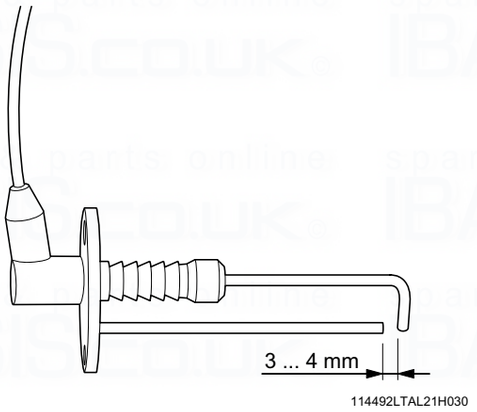

fig. 31 Check the ignition electrode

Check the ignition electrode adjustment (between 3 and 4 mm) and replace electrode if necessary (including sealing). Also check the electrode's porcelain for hairline fractures because this may cause spark-over.

10.5 Checking for leaks

Check for water, flue gas and gas leaks.

10.6 Checking water pressure

The water pressure must be a minimum of 0.8 bar . The water pressure also depends on the height of the central heating system above the boiler (static pressure, 1 bar = 10 m high). It is recommended to fill the system to approx. 0.8 bar above this static pressure.

10.7 Putting boiler back into operation

1. Open the gas cock in the gas pipe to the boiler .
2. Switch on the mains supply to the boiler .
3. Adjust the boiler and any external controls to heat demand.
4. Perform another flue gas analysis (*see Section 9.2* and adjust if necessary.

11. Control stops and faults

11.1 General

The boiler is fitted with an advanced control unit. The heart of the control is a microprocessor, the **abc®**, which both protects and controls the boiler.

11.2 Control stops and faults

Control stop:
The control stop is a (temporary) boiler operating mode due to an abnormal situation. The boiler switches to the neutral position so that it can return to a normal state. The display then shows the shutdown status (with code 9) again. The boiler control unit will, at first, try several times to start the boiler again. The boiler shall operate again when the causes of the control stop have been removed.

Fault:
If the shutdown condition still exists even after various automatic control unit start attempts have been made or if a non-reproducible phenomenon has arisen, the boiler switches to fault mode (also known as lock-out). The boiler can only resume operation if the cause of the fault is rectified and the ‘ **RESET button**’ is pressed

11.3 Control stop codes

The boiler display will show code 9.
The control stop codes can be read out as follows:
- Push the **- key,** and then the **- key;**
- The display shows St = 9;
- Push the **[+]- key** one time**;** the display shows Su and the control stop code.

☞
The boiler shall start automatically when the causes of the control stop have been removed.

Code 5u.	Description	Possible cause	Check/solution
0	Parameter fault		• Reset dF and dU • Reset with RECOM PC
1	Maximum flow temperature exceeded	• No flow or insufficient flow	Check: • Flow and/or reason for heat demand
3	Maximum heat exchanger temperature exceeded	• No flow or insufficient flow during heat demand	Check: • Flow (direction, pump, valves) • That the system has been correctly bled • Temperature sensors for deviations • Water pressure in the system • Whether the heat exchanger is dirty
4	Maximum heat exchanger temperature increase exceeded	• No flow or insufficient flow • Sensor fault	Check: • Flow (direction, pump, valves) • That the system has been correctly bled • Temperature sensors for deviations • Water pressure in the system • Whether the heat exchanger is dirty
5	Maximum difference between heat exchanger and return temperature exceeded	• No flow or insufficient flow during heat demand • Sensor fault	Check: • Flow (direction, pump, valves) • That the system has been correctly bled • Temperature sensors for deviations • Water pressure in the system • Whether the heat exchanger is dirty
6	Maximum difference between heat exchanger and flow temperature exceeded	• No flow or insufficient flow during heat demand • Sensor fault	Check: • Flow (direction, pump, valves) • That the system has been correctly bled • Temperature sensors for deviations • Water pressure in the system • Whether the heat exchanger is dirty
8	Waiting time release signal drift	• External cause • Incorrectly set parameter • Bad connection	• Remove external cause • Check the parameter • Check the connection
9	Phase and neutral of mains supply mixed up	• Mains supply incorrectly wired • Floating or 2-phase system	• Reconnect phase and neutral • Set parameter 32 to 0
10	Shutdown interlock active	• External cause • Incorrectly set parameter • Bad connection	• Remove external cause • Check the parameter • Check the connection
11	Shutdown interlock active or frost protection active	• External cause • Incorrectly set parameter • Bad connection	• Remove external cause • Check the parameter • Check the connection
13	Communication fault with SCU (= optional PCB)	• BUS connection inadequate or non-existent • SCU PCB not present (any longer) in boiler	• Reconnect • Carry out automatic detection
14	Water pressure too low	• Water pressure non-existent or too low • Incorrect water pressure parameter adjustment • W ater leakage	Check: • Water pressure in the system • Minimum water pressure • That hydraulic pressure sensor is properly installed /connected
15	Gas pressure too low	• No flow or insufficient flow • Incorrect GPS switch adjustment • Wiring defect or switch faulty	Check: • That the gas cock is fully opened • That there is adequate gas pressure • That the GPS switch is properly installed • Replace the GPS switch if necessary
16 *	Configuration fault or SU not recognised	• Incorrect SU PCB for this boiler	• Replace SU PCB

Code Su	Description	Possible cause	Check/solution
17 *	Configuration fault or default parameters table incorrect	• PCU-01 unit parameters incorrect	• Replace PCU-01 unit
18 *	Configuration fault or parameter storage unit (PSU) not recog-nised	• Incorrect PSU PCB for this boiler	• Replace PSU PCB
19 *	Configuration fault or dF-dU parameters unknown		• Add/check dF and dU
20 *	Configuration procedure active	• Standard briefly activated following boiler switch-on	• No action
21	Communication fault with SU-01	• Bad connection	• Check that the PCB is inserted in the correct connector
22	No flame during operation	• No ionisation current	Check: • That the gas cock is fully opened • That the gas pressure is sufficient • That the gas block is appropriately adjusted and working correctly • Whether the air supply or flue gas discharge are blocked • The flue gas circulation; inspect the flue gas discharge system for installation faults and the heat exchanger for leaks
24	VPS test failed	• Gas pressure non-existent or too low • Faulty gas valve • Incorrect adjustment of the VPS switch • Wiring fault • Faulty VPS switch	Check: • That the gas cock is fully opened • That the gas pressure is sufficient • That the VPS switch is properly installed • Whether the gas valve is leaking or in the open position • That the wiring is OK; mix up of the V1 and V2 plugs • The adjustment of the VPS switch • Replace the VPS switch if necessary • Replace the gas valve if necessary
25	Internal fault SU-01		• Replace SU-01
* These lock-outs are not stored in the failure memory.			

table 15 *Control stop codes*

11.4 Fault codes

The boiler displays the fault codes as follows:
E 12 (the display shows the ⚠ **symbol** and the fault code flashes). The meaning of the fault codes can be found in the fault table, *see table 16.*

In the event of faults, proceed as follows:
• Note the fault code.

The fault code is needed to find the cause of the fault quickly and correctly and for any support from our Customer Care Department.

• Press the "**RESET- key"** for 2 seconds. If the fault code continues to appear, look for the cause in the following fault table and rectify the fault.

☞
If the display does not show RESET but SERVICE, the boiler must be switched off and switched on again after 10 seconds before the fault can be reset.

Fault code	Description	Possible cause	Check/solution
E:00	Storage unit parameter not found	• Bad connection	• Check the cable bundle
E:01	Safety parameters not in order	• Bad connection	• Check the cable bundle
E:02	Heat exchanger temperature sensor short circuited	• Bad connection • Defective sensor • Sensor not correctly mounted	• Check the cable bundle • Replace the sensor if necessary • Check if sensor is correctly mounted
E:03	Heat exchanger temperature sensor open circuit	• Bad connection • Defective sensor • Sensor not correctly mounted	• Check the cable bundle • Replace the sensor if necessary • Check if sensor is correctly mounted
E:04	Heat exchanger temperature exceeded below normal range	• Bad connection • Defective sensor • Sensor not correctly mounted • No or to little flow	• Check the cable bundle • Replace the sensor if necessary Check: • flow (direction, pump, valves) • if system has been correctly bled • temperature sensors for deviations • if sensor is correctly mounted • water pressure in the system • if heat exchanger is dirty
E:05	Heat exchanger temperature exceeded above normal range (high limit thermostat)		
E:06	Return temperature sensor short circuited	• Bad connection • Defective sensor • Sensor not correctly mounted	• Check the cable bundle • Replace the sensor if necessary • Check if sensor is correctly mounted
E:07	Return temperature sensor open circuit	• Bad connection • Defective sensor • Sensor not correctly mounted	• Check the cable bundle • Replace the sensor if necessary • Check if sensor is correctly mounted
E:08	Return temperature exceeded below normal range	• Bad connection • Defective sensor • Sensor not correctly mounted • No or to little flow	• Check the cable bundle • Replace the sensor if necessary Check: • flow (direction, pump, valves) • if system has been correctly bled • temperature sensors for deviations • if sensor is correctly mounted • water pressure in the system • if heat exchanger is dirty •
E:09	Return temperature exceeded above normal range		
E:10 E:11	Too great a difference between heat exchanger and return temperature	• Defective sensor • No or to little flow • Sensor not correctly mounted	• Replace the sensor if necessary Check: • flow (direction, pump, valves) • if system has been correctly bled • temperature sensors for deviations • water pressure in the system • if heat exchanger is dirty • if sensor is correctly mounted

Fault code	Description	Possible cause	Check/solution
E:12	Trap protection activated	• Bad connection • Pressure in flue gas discharge duct is (was) too high • air supply obstructed	• Check the cable bundle • Check that the trap is not empty; top up if necessary • Blockage in flue gas discharge/RGA covered • Cascade valve does not open • Trap is blocked • Heat exchanger is dirty • check the air supply
E:14	5 failed burner starts	• No ignition spark	Check: - connection between ignition cable and transformer - electrode distance, this must be 3 to 4 mm - breakdown to earth - condition of the burner set (burner set/electrode seal) - earthing - bad actuation on SU board
		• Ignition spark, but no flame	Check: - is the gas cock opened? - is the inlet gas pressure sufficient? - is the gas pipe vented? - correct gas block operation and adjustment? - is the air supply or flue gas discharge blocked? - condition of cable bundle to gas block - bad actuation on SU board
		• Flame, but insufficient ionisation	Check: - condition of the electrode and earthing - condition of cable bundle between ignition cable and transformer - if gas cock is fully opened - if the gas pressure is sufficient
E:15	5 failed gas leakage controls	• Defective gas valve • No or to little gas pressure • VPS switch wrongly adjusted • Bad connection • Defective sensor • Sensor not correctly mounted	• Is the gas cock opened? • Is the gas pressure sufficient? • Are the VPS switches correctly fitted? • Gas valve is leaking or is stuck in the open position. • Is the wiring in order, plugs V1, V2 not mixed up? • Check the VPS settings • Replace the sensor if necessary • Check if sensor is correctly mounted
E:16	False flame signal	• Ionisation current has been measured, while there may not be a flame • Defective ignition transformer	• Burner glows as a result of a high CO_2 percentage (adjust CO_2). • Check the ignition/ionisation electrode • Gas valve is leaking or is stuck in the open position. • Replace ignition transformer
E:17	Gas valve control fault	• Bad connection • Defective gas valve	• Check the cable bundle • Replace the gas valve if necessary
E:32	Flow temperature sensor short circuited	• Bad connection • Defective sensor • Sensor not correctly mounted	• Check the cable bundle • Replace the sensor if necessary • Check if sensor is correctly mounted

Fault code	Description	Possible cause	Check/solution
E.:33	Flow temperature sensor open circuit	• Bad connection • Defective sensor • Sensor not correctly mounted	• Check the cable bundle • Replace the sensor if necessary • Check if sensor is correctly mounted
E.:34	Fan fault	• Bad connection • Defective fan	• Fault in fan cabling • Defect in fan • (Too) much draught over boiler, so that the fan starts to rotate
E.:35	Flow and return swopped	• Defective sensor • W rong flow direction • Bad sensor connection • Sensor not correctly mounted	Check: - flow direction - temperature sensors for deviations • Replace the sensor if necessary
E.:36	Flame loss occurs 5 times	• Ionisation current drops out	• Inlet gas pressure sufficient? Inlet gas pressure controller in order? • Correct gas block operation and adjustment? • Blockage in air supply or flue gas discharge? • Flue gas circulation, check flue gas system for installation faults and the heat exchanger for possible leaks
E.:37	Communication fault with SU board	• Bad connection	• Check SU board is correctly inserted in the connector on the PCU-01
E.:38	Communication fault with SCU board (optional)	• Bad connection	• Check the cable bundle
E.:39	Shutdown input in locked-out mode	• External cause • Incorrectly set parameter • Bad connection	• Remove external cause • Check the parameter • Check the cable bundle

table 16 *Fault codes*

11.5 Control stop - and fault memory

The boiler control unit has a control stop and fault memory . This stores the last 16 control stops and the last 16 faults that have occurred.
With each fault, the following data is saved:
- b. or E. = control stop or fault code
- n = Number of times that the fault has occurred in succession
- hr = Burner operating hours since time of fault
- St = status
- Su = sub status
- t1 = flow temperature [°C];
- t2 = return temperature [°C];
- t4 = outside temperature [°C];
- t6 = boiler block temperature [°C];
- SP = internal set point [°C];
- FL = ionisation current [µA];
- nF = fan rotation speed [rpm];
- Pr = water pressure [mbar];
- Po = relative output supplied [%];

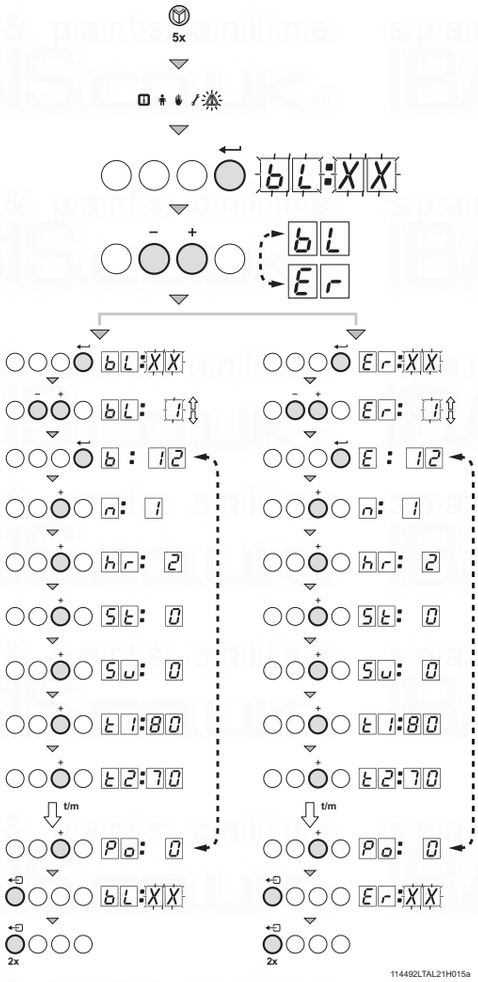

fig. 32 Reading faults or control stops

11.5.1 Reading faults

- Press the **-key** several times until the ⚠ symbol flashes in the menu bar;
- Press the ↵ **key**; bL: XX will flash in the display, together with the number of shutdowns that have been memorised;
- Press the **[+]** or **[-] key** to select either the control stops bL or faults Er.
- Press the ↵ **key**; bL: XX will flash in the display, together with the number of shutdowns that have been memorised;
- Press the **[+]** or **[-]** -**key** to go forwards or backwards in the list of faults.
- Press the ↵ **-key** to take a closer look at the fault.
  Press the **[+]** or **[-]** -**key** to view the following information:
  b:12 (shut down code b with fault number e.g. 12);
  n:1 (number of n with the 'number of times that the fault has occurred' as number);
  hr = 2 (burner operating hours since time of fault) ; St (status code) ; Su (sub status);
  t1:80 (temperature t1, the flow temperature 80 when the fault occurred);
  t2:70 (temperature t2, the return temperature 70 when the fault occurred);
- Press the ⇦ **-key** to stop the cycle, bL: XX will appear flashing in the display with the number of the last fault;
- Press the **[+]** or **[-]** -**key** to view any subsequent fault information.

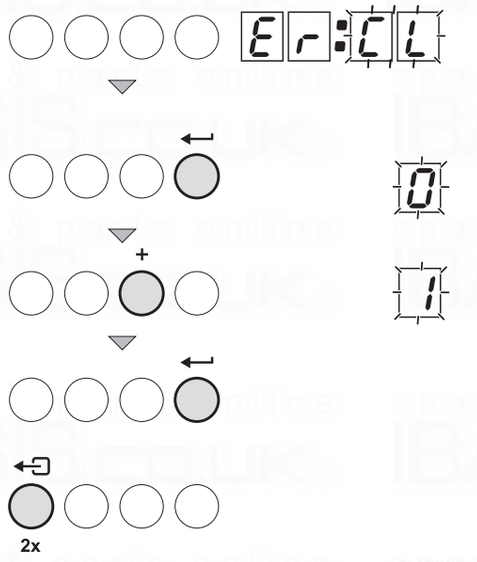

fig. 33 Deleting faults

11.5.2 Deleting control stops or faults

The last message in the list in the display is Er:CL (or bL:CL with shutdowns)

- Press the ↵˜**-key**; the display will show: 0
- Press the **[+]** -**key** to set the parameter to 1.
- Press the ↵ -**key ;** the fault memory is cleared
- Press the ⇦ **- key** twice to exit the fault memory.

With faultfinding, retrieving the operating status when the fault occurred can contribute to faster rectification of the cause.

12. Service parts

12.1 General

If it is ascertained during the annual inspection or maintenance work that a part in the boiler must be replaced, use only original parts or parts and materials recommended by Broag.

Send the part to be replaced to Broag. Always send a fully completed return form as well, see example. In this way , Broag can handle its guarantee obligations faster and more ef ficiently.

Your reference		Date	
Customer			
Name			
Address			
Zip code / city			
Telephone			
Contact person			
Job number			

Part. no.	Description	Boiler serial nr.*	Model	Installation date	Problem description	Reference

table 17 *Return form sample*

* This data can be found on the boiler type plate; the type plate is stuck to the top of the boiler's right side panel.

remeha

12.2 Exploded view

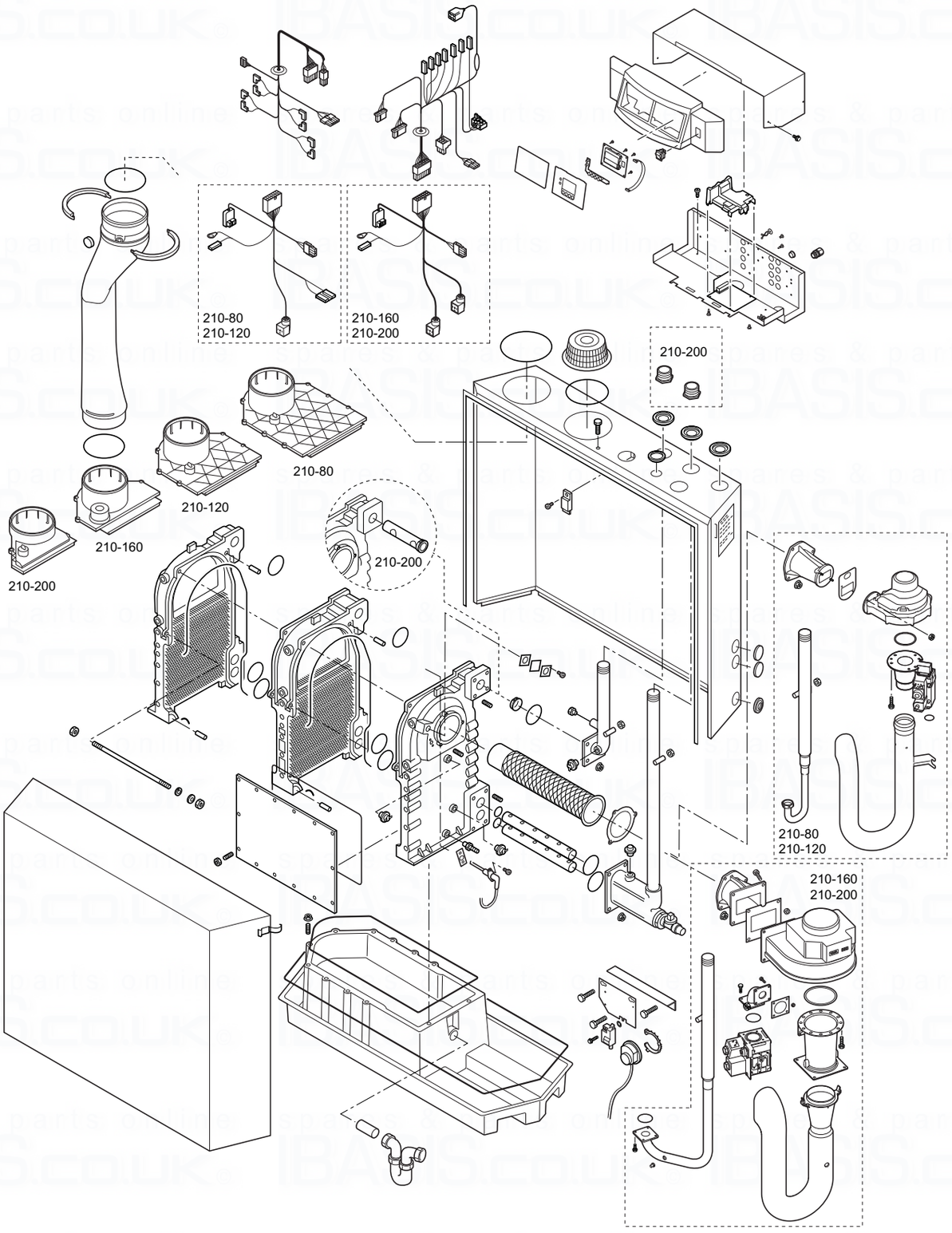

fig. 34 Exploded view

13. Regulations

13.1 General

The Remeha Gas 210 ECO **PRO** is a high efficiency, floor standing central heating boiler, suitable for use with all types of natural gas; it recovers both perceptible and latent heat from flue gases.

The units are inspected on the basis of the essential requirements in the following directives:

- Gas Appliances Directive no. 90/396/EEC
- Efficiency Requirements Directive no. 92/42/EEC
- EMC Directive no. 89/336/EEC
- Low Voltage Directive no. 73/23/EEC
- Pressure Equipment Directive no. 97/23/EEC, article 3, sub. 3

CE identification number: 0085BS0132
NOx class: 5
NOx identification number: BS004

13.2 Standards

The following instructions must be adhered to when the Remeha Gas 210 ECO **PRO** is installed:

- Gas Safety (Installation and Use) Regulations 1998 (as amended). In addition to the above regulations, this boiler must be installed in compliance with:
- Current I.E.E. Regulations for electrical installations
- Local building regulations
- The Building Standards (Scotland)
- (Consolidation) Regulations
- by-laws of the local water undertaking
- Health and Safety Document No 635 'The Electricity at W ork Regulations 1989'.

It should also be in accordance with the relevant recommendations in the current edition of the following British Standards and Codes of Practice, viz. BS 6644, BS 5978 Part 1 & 2, BS 5449, BS 5446, BS 6798, BS 6891 and BG DM2.

13.3 Remeha factory test

Before leaving the factory, every Remeha boiler is optimally set and tested for:

- electrical safety;
- CO_2 adjustment;
- hot water operation;
- water tightness;
- gas tightness;
- control unit parameters.

13.4 Supplementary guidelines

In addition to the regulations and guidelines mentioned in *Section 13.2*, the supplementary guidelines in this documentation must also be followed. Supplements or subsequent regulations and guidelines in existence at the time of installation shall apply to all regulations and guidelines mentioned in this Installation and Service manual.

⚠

The Remeha Gas 210 ECO **PRO** is a CE certified boiler and must not be modified or installed in any way contrary to these "Installation and Maintenance Instructions". Manufacturers Instructions must NOT be taken as overriding statutory obligations.

14. Technical specifications

14.1 Technical data

Boiler type Gas 210 ECO PRO		Unit	210-80	210-120	210-160	210-200
General						
Number of sections			3	4	5	6
Input control		-	**Modulating, 0-10 V or on/off**			
Nominal output (80/60°C) Pn	min	kW	16	22	29	39
	max	kW	87	120	166	200
Nominal output (50/30°C) Pn	min	kW	18	24	33	44
	max	kW	93	129	179	217
Nominal input gross caloric value (GCV/Hs) Qn	min	kW	19	26	34	46
	max	kW	99	137	189	228
Nominal input net caloric value (NCV/Hi) Qn	min	kW	17	23	31	41
	max	kW	89	123	170	205
Gas and flue gas side						
Category		-	II_{2H3P}			
Inlet gas pressure natural gas		mbar	17 - 30			
Gas consumption natural gas	min	m_0^3/h	1.8	2.4	3.3	4.3
	max	m_0^3/h	9.4	13.0	18.0	21.7
Nox emissions		mg/kWh	< 62			
Nox emissions (O_2 = 0%, dry)		ppm	< 35			
Residual fan pressure		Pa	130	130	130	130
Flue gas quantity	min	kg/h	27.2	36.7	49.5	65.5
	max	kg/h	149.7	206.9	286.0	344.9
Type classification with respect to flue gas discharge		-	B23, $B23_P$, C13, C33, C43, C53, C63, C83			
Central heating side						
High limit temperature		°C	110			
Operating temperature range		°C	20 - 90			
Minimum water working pressure		bar	0.8			
Maximum water working pressure PMS		bar	6			
Water content		litres	12	16	20	24
Hydraulic resistance at ΔT = 20°C		mbar (kPa)	165 (16.5)	135 (13.5)	170 (17)	180 (18)
Electrical						
Mains voltage		V/Hz	230/50			
Input power (without pump)	min	Watt	4	4	4	4
	max	Watt	125	193	206	317
Insulation class		IP	20			
Other						
Weight excluding water		kg	115	135	165	188
Noise level at a distance of 1 m from the boiler (enclosed version)		dB(A)	≤ 59			
Environment temperature		°C	0 - 40			
Colour of casing		RAL	2002 (red)/7037 (grey)			

table 18 *Technical data*

15. Efficiency data and gas inspection labels

15.1 Unit usable efficiency (HR efficiency)

Up to 108.6 with respect to Hi at T_{Return} = 30°C.

15.2 Water-side efficiency

a. Up to 98.4% with respect to Hi at full load at an average water temperature of 70°C (80/60°C).
b. Up to 105.7% with respect to Hi at full load an average water temperature of 40°C (50/30°C).

15.3 Zero-load losses

Approx. 0.21% with respect to Hi at an average water temperature of 45°C.

15.4 Description of specifications

High efficiency gas boiler
Inspected for compliance with the essential requirements of the Gas Appliances Directive, Efficiency Directive, Low Voltage Directive and EMC Directive.

- Boiler conforms to Pressure Equipment Directive (article 3, sub. 3).
- Modulating (18 - 100%) or 0-10V or on/off control is optional.
- Hydraulic efficiency up to 98.4% at full load (with respect to Hi) at 80/60°C and up to 105.7% (with respect to Hi) at 50/30°C.
- Suitable for use with II_{2H3P}
- Annual NO_x emissions < 62 mg/kWh, or < 35 ppm at O2 = 0% (NOx - class 5).
- Average boiler housing noise level at 1 m distance around boiler ≤ 59 dBA
- Heat exchanger made of cast aluminium sections.
- Cylindrical, stainless steel, premix burner with metal fibre cover.
- Air supply fan.
- Flue gas pressure difference switch.
- Temperature control: adjustable between 20 - 90°.
- Low water level protection using temperature sensors.
- Gas/air mixing system (venture).
- Gas multiblock (210-80 + 210-120 ;230V) (210-160 + 210-200; 30 RAC)
- Electronic control and protection equipment: 230 V.
- Fan; 230V
- Pump switch: on/off 230 V max. 300 VA.
- Frost protection.
- Filling and drain cock.
- T rap.
- Suitable for both room ventilated and room sealed versions.
- Sheet steel casing, off the ground.
- Plastic condensate collector.
- Boiler equipped with closed air box.
- Boiler fully pre-wired with built-on control box.
- Installation option for boiler controllers.
- Suitable for OpenTherm controllers.
- Supplied with internal heating curve.
- Well laid-out instrument panel with LCD display.
- Menu-controlled microprocessor boiler control with operating and servicing diagnostics.

Available in 4 types:

210 -80:	87 kW nominal output at 80/60°C
210-120:	120 kW nominal output at 80/60°C
210-160:	166 kW nominal output at 80/60°C
210-200:	200 kW nominal output at 80/60°C

15.5 Accessories

- Modulating ***rematic***® weather compensators.
- OpenTherm weather compensators (Celcia 20), also for cascade configurations (Celcia MC4).
- Air supply filter (only for use with “open flue”).
- Concentric wall and roof feed-through connections.
- Second return connection (for CT circuit).
- Thermostat pocket
- Cleaning tools.
- Service case.
- Recom communication set with CD-ROM, interface and wiring.
- Interfaces for communication with various controllers, *see Section 8.4.3*.
- 0 - 10 V control PCB (IF-01).
- Expanded control/protection PCB (SCU-S01).
- Outside temperature sensor* (only possible in combination with SCU-S01 PCB).
- Flue gas temperature switch* (only possible in combination with SCU-S01 PCB).
- Minimum gas pressure switch* (only possible in combination with SCU-S01 PCB).
- Water pressure sensor* (only possible in combination with SCU-S01 PCB).
- Motorised flue gas discharge valve* for cascade configurations and to prevent flue gas from flowing back (only possible in combination with SCU-S01 PCB).
- Gas leakage control* (for the 166 and 200 kW boilers), only possible in combination with SCU-S01 PCB.

* Only one PCB (SCU-S01) board is needed for one or all of these options.

15.6 Services

The following services can be supplied by Broag:
- Initial commissioning.
- W arranty support.
- Access to list of Broag trained and approved service companies.

Please contact our Technical department for further information on certified maintenance and inspections.

15.7 Type of unit

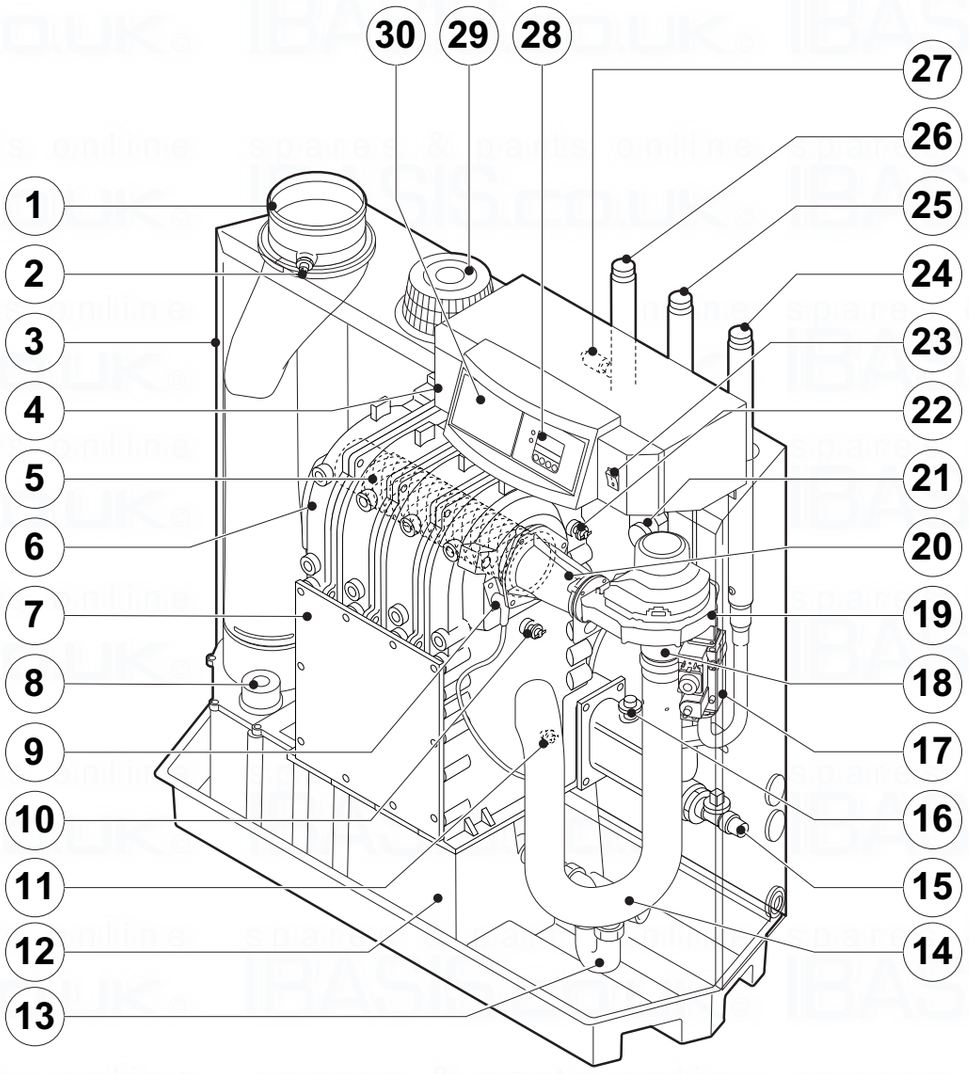

fig. 35 Cross-section

1. *Flue gas discharge*
2. *O_2/CO_2 measuring point*
3. *Air box*
4. *Control panel*
5. *Burner*
6. *Heat exchanger*
7. *Inspection hatch*
8. *Inspectionhatch for condensate collector*
9. *Ignition pin*
10. *Boiler heath exchanger sensor*
11. *Return temperature sensor*
12. *Condensate collector*
13. *Condensate trap*
14. *Air silencing tube*
15. *Filling and drain cock*
16. *Water pressure switch (option)*
17. *Gas multiblock*
18. *Venturi*
19. *Fan*
20. *Mixing tube*
21. *Flue gas switch*
22. *Flow temperature sensor*
23. *On/off*
24. *Gas connection*
25. *Return connection*
26. *Flow connection*
27. *Thermostat pocket*
28. *Display*
29. *Combustion air supply*
30. *Facility for built-in weather compensator*

15.8 Operating principle

The inlet side of the fan is fitted with a venturi, where air and g as are mixed according to a fixed ratio. When there is a heat demand, the fan will pre-vent. The fan draws in the combustion air, which is mixed with the gas to optimum ef fect in the venturi. The fan moves the homogenous gas/air mixture through to the burner. The mixture is then ignited by the combined ignition and ionisation electrode, which also monitors the flame. Combustion then takes place. Following combustion, the hot flue gases pass through the cast aluminium heat exchanger. Here, the flue gases release their heat to the heating water in the heat exchanger. The heat output of the boiler is controlled on the basis of the settings and the prevailing water temperatures that are measured by the temperature sensors. With flue gas temperatures below dew point (approx. 55°, the temperature at which the water vapour in the flue gases starts to condense), the water vapour in the flue gases will condense in the lower part of the heat exchanger. The heat released during this condensation process (called latent heat or heat of condensation) is also transferred to the heating water. The condensed water is discharged through a trap. The flue gases flow through the condensate collector and are discharged via the flue gas discharge pipe.

The advanced control system of the boiler, the **abc®**, guarantees extremely reliable heat supplies. This means that the boiler responds quickly and efficiently to negative environmental influences (such as hydraulic flow problems, air flow problems, etc.). If problems of this kind occur, the boiler will not lock out, but initially modulate down and, depending on the nature of the problem, switch off temporarily (shutdown or control stop) and try again after a pre-determined time. Providing the situation is not hazardous, the boiler will always continue to attempt to provide heat. For a continuous supply of heat, the boiler requires a minimum flow of 30 % of the nominal flow at the relevant design temperatures. The boiler can be equipped with a second return for CT circuit (available as an accessory). The second return can contribute additional efficiency if the installation includes different temperature groups.

15.9 Boiler Control

15.9.1 Temperature control

The Remeha Gas 210 ECO **PRO** is equipped with electronic temperature control based on flow, return and boiler block temperature sensors. The flow temperature is adjustable between 20 and 90°C (factory setting 80°C).

15.9.2 Low water level protection

The Remeha Gas 210 ECO **PRO** is equipped with low water protection based on temperature difference measurements and temperature increase measurements.

15.9.3 Maximum protection

The maximum protection switches the unit off if the water temperature is too high (110°C) and interlocks it on the control box. Once the fault has been remedied, the unit can be reset using the **reset-**key.

15.9.4 Frost protection

The unit must be installed in a frost-free area to prevent freezing of the condensate drain pipe. If the temperature of the heating water drops too much, the built-in unit protection activates.

16. Application data

16.1 General

The boiler is suitable for a wide range of applications. The boiler offers numerous flue gas, hydraulic, gas and control application options, but, at the same time, is not complicated to install. This and its moderate dimensions, low noise levels and cascade options mean the boiler can be installed almost anywhere (for general legal requirements, see *Section 13.2*).

16.2 Air and flue gas application options

The choice of versions (open or closed combustion air supply) provides excellent siting flexibility for the boiler. A motorised flue gas discharge valve is available as an accessory and is used for overpressure flue gas cascade arrangements.
The boiler is equipped with an enclosed housing that also serves as an air box. An air filter and connection set are available for situations in which the boiler has to be commissioned during the construction phase or has to operate in a heavily polluted environment (this only applies to room ventilated versions).
Direct connection to structural ducts is not acceptable because of condensation, see *Chapter 7* for instructions and flue gas discharge tables.

16.3 Hydraulic application options

The advanced boiler control (**abc®**) and relatively low hydraulic resistance ensures that the boiler can be used in virtually any hydraulic system.

16.4 Cascade application

The boiler is also suited for configuration in a cascade. For overpressure flue gas cascade arrangements, use our motorised flue gas discharge valve (available as an accessory). This prevents flue gas from flowing back to boilers that are not in operation. As a result of the narrow width and depth of the boiler, a heat output of 400 kW (2 x Gas 210- 200) can be provided in a floor area of just under 1.2 m^2. A floor area of less than 3 m^2 is sufficient to include room for service and maintenance. If necessary, consult our Technical department.

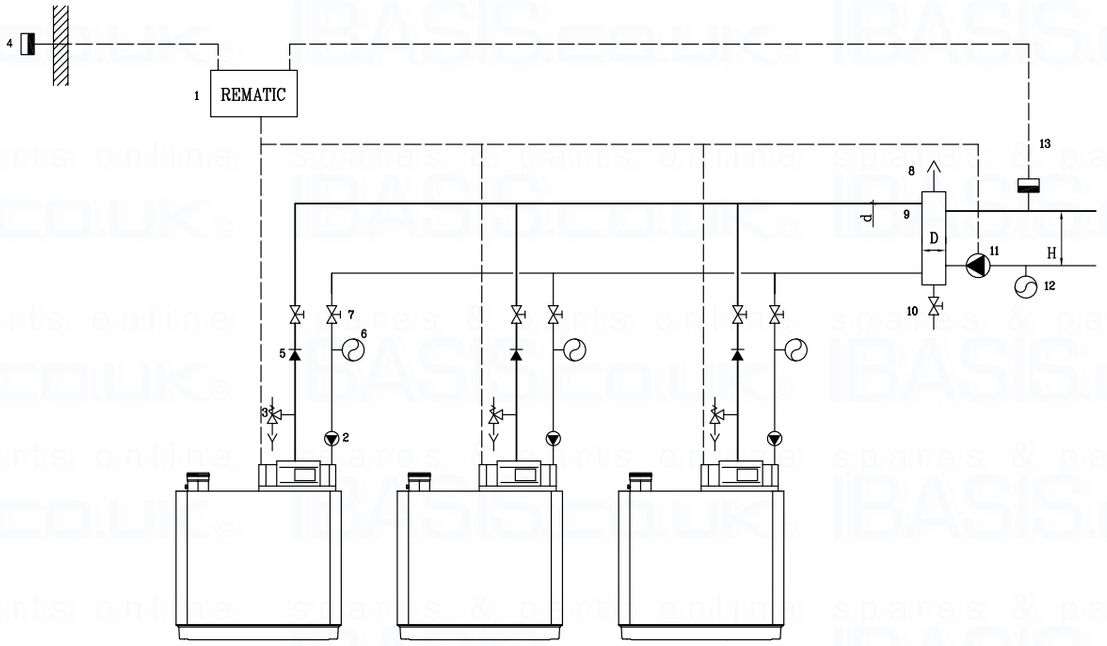

fig. 36 Example of a hydraulic diagram cascade configuration

1. *modulating cascade controller*
2. *pump*
3. *safety valve*
4. *outside temperature sensor*
5. *non return valve*
6. *expansion vessel*
7. *manual seal*
8. *automatic air vent*
9. *pressure-free distributor (not supplied by Remeha, see table 19 for dimensions)*
10. *drain cock*
11. *system pump*
12. *expansion vessel system*
13. *flow temperature sensor*

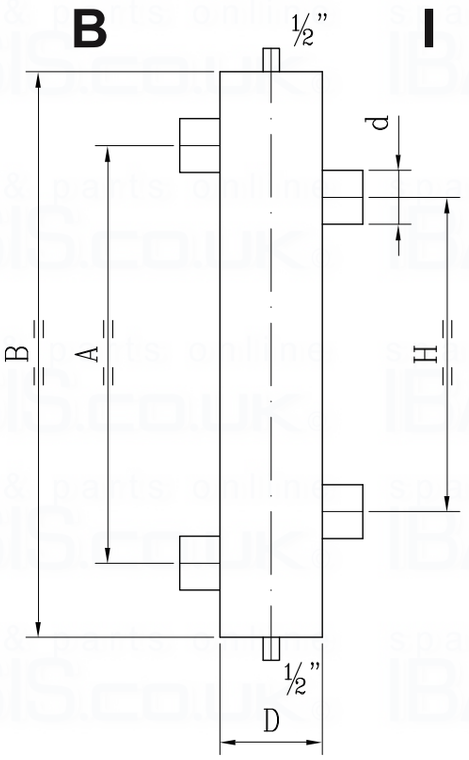

The following table shows the minimum dimensions for the various pipes and for the low loss header based on a ΔT design of 20°C. The boiler has a no built-in pump.

fig. 37 Illustration of low loss header

B = boiler side
I = installation side

Output	Rate of flow Q	d int.	D Ø or D square		H	A	B
kW	m3/h	inch	inch	mm	mm	mm	mm
80	3.4	1¼	3 (DN 80)	70	280	370	510
120	5.2	2	4 (DN 100)	90	350	465	630
160	6.9	2	4 (DN 100)	100	350	465	630
200	8.6	2½	5 (DN 125)	110	440	580	770
240	10.3	2½	5 (DN 125)	120	440	580	770
280	12.0	2½	6 (DN 150)	130	440	580	770
320	13.8	2½	6 (DN 150)	140	440	580	770
360	15.5	2½	6 (DN 150)	150	440	580	770
400	17.2	2½	8 (DN 200)	160	440	580	770
440	18.9	3	8 (DN 200)	170	540	720	900
480	20.6	3	8 (DN 200)	170	540	720	900
520	22.4	3	8 (DN 200)	180	540	720	900
560	24.1	3	8 (DN 200)	190	540	720	900
600	25.8	3	8 (DN 200)	190	540	720	900
640	27.5	3	10 (DN 250)	200	540	720	900

table 19 *Low loss header dimensions*

16.5 Control options

The following types of control can be used for the boiler:
- as a single boiler or in a cascade with modulating controllers based on room and/or outside temperature
- on/off controllers, using the boiler's internal heating curve if necessary (in combination with outside temperature sensor)
- high/low controllers
- analogue signals (0-10 V) for control based on output or flow temperature.

For further details, see *Section 8.4.3*

16.6 Gas application options

The boiler is suitable for use with natural gas category I I_{2H3P}. For further data, see *Chapter 6*.

17. Checklists (records)

17.1 Checklist for commissioning (Commissioning record)

Commissioning work, *see Section 9.2*	**Measured value or confirmation**
1. Fill the central heating system with water. Check the water pressure in the central heating system.	O
2. Fill trap with water.	O
3. Vent central heating system	O
4. Check circulation pump operation	O
5. Check water-side connections for tightness	O
6. Check type of gas offered (Does the type of gas offered correspond to the type of gas for which the boiler is suited?)	O Natural gas G20/G25/propane Wobbe index …….kWh/m³
7. Check the gas supply pressure	O
8. Check gas meter capacity	O
9. Check the gas tightness of the connections and the gas pipes	O
10. Vent gas supply pipe	O
11. Check electrical connections	O
12. Air supply and flue gas discharge connections checked	O
13. Check function and operational status of the boiler	O
14. Check whether the gas/air ratio control is correct	O
15. Measuring equipment removed and cap refitted on flue gas measuring point	O
16. Refit boiler front housing again in the proper manner	O
17. Write type of gas on the boiler type plate	O
18. Set room thermostat or boiler control to desired value	O
19. Instruct user and hand over the necessary documents	O
20. Confirmation of commissioning (Company name, signature of engineer)	Date:

table 20 *Commissioning record*

17.2 Checklist for annual inspection (inspection record)

Inspection work, *see Chapter 10.*	**Confirmation and date**								
1. Water pressure checked									
2. Air supply and flue gas discharge connections checked									
3. Ignition electrode checked									
4. Combustion checked									
5. Heat exchanger (central heating) checked									
6. Check the venturi for corrosion									
7. Confirmation of inspection (signature of engineer)									

table 21 *Inspection record*

17.3 Checklist for maintenance (maintenance record)

Maintenance work *(see Section 10)*	**Confirmation and date**								
1. Ignition electrode checked									
2. Heat exchanger (central heating) cleaned									
3. Combustion checked									
4. Water pressure checked									
5. Air supply and flue gas discharge connections checked									
6. Check the venturi for corrosion									
7. Burner checked									
8. Confirmation of maintenance (signature of engineer)									

table 22 *Maintenance record*

Broag Ltd.
Remeha House
Molly Millars Lane
RG41 2QP WOKINGHAM, Berks.
Tel: +44 118 9783434
Fax: +44 118 9786977
Internet: uk.remeha.com
E-mail: boilers@broag-remeha.com

ISO 9001
sinds 1988

OpenTherm®

CE

© Copyright
All technical and technological information contained in these technical instructions, as well as any drawings and technical descriptions furnished by us remain our property and may not be multiplied without our prior consent in writing.

19 March 2010

114494

remeha